WATERCO

water, the liquid of life

www.waterco.com

Commercial and Water Treatment Catalogue

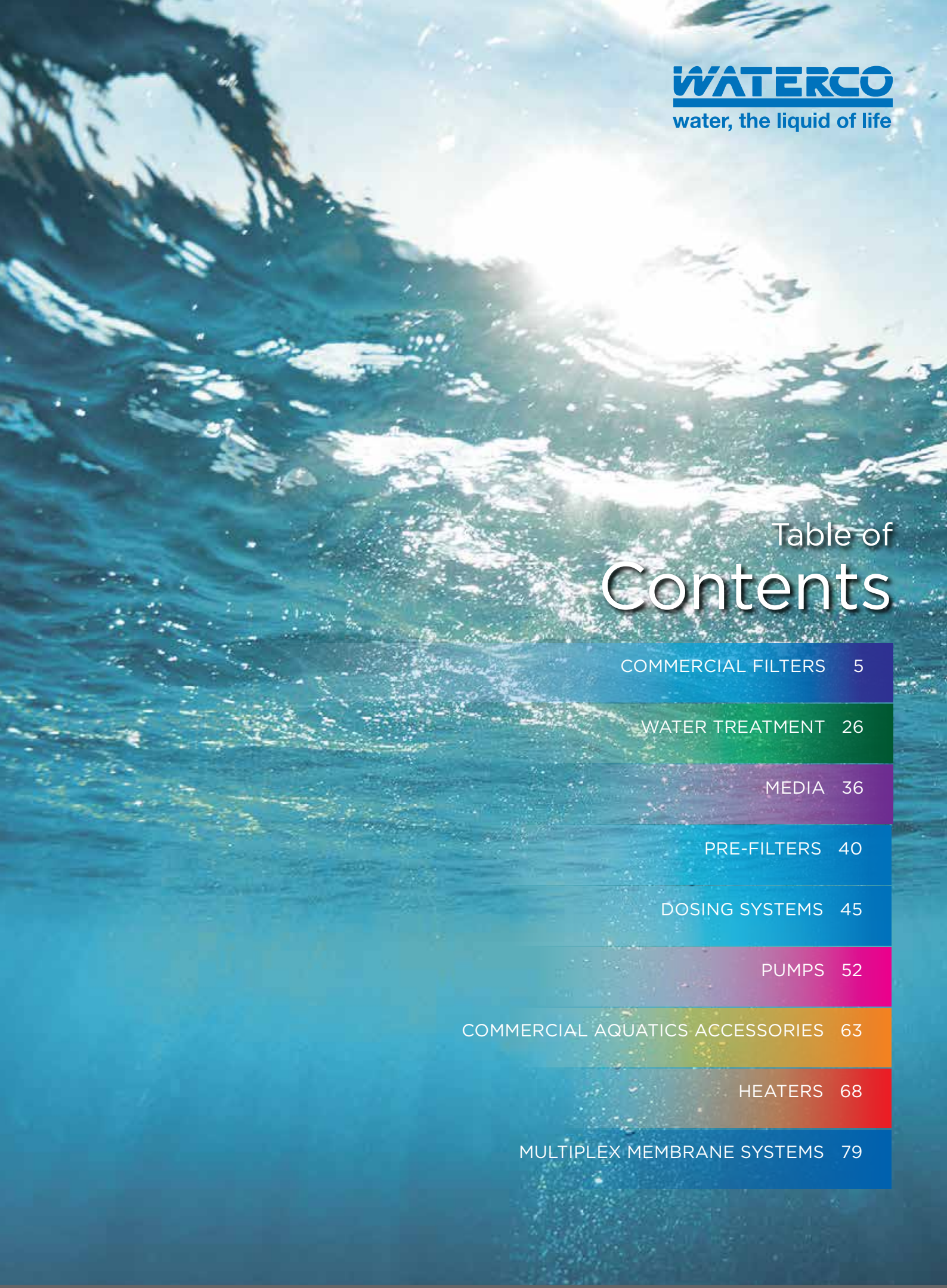

WATERCO
water, the liquid of life

Table of Contents

COMMERCIAL FILTERS 5

WATER TREATMENT 26

MEDIA 36

PRE-FILTERS 40

DOSING SYSTEMS 45

PUMPS 52

COMMERCIAL AQUATICS ACCESSORIES 63

HEATERS 68

MULTIPLEX MEMBRANE SYSTEMS 79

Micron Commercial Fibreglass Filters

Micron Sidemount Deep Bed Filters

Hydraulically Balanced Laterals

Hydraulically balanced “Fish Tail or Fish Bone” laterals for filtration and backwashing efficiency.

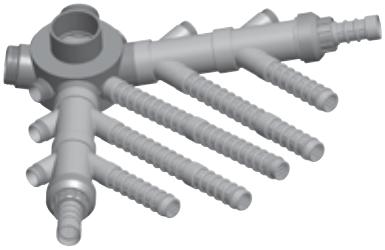

Micron SPDD Nozzle Plate Filters

Patented Nozzle Plate

A patented design for filtration and backwashing uniformity along with a custom designed flexible joint for durability.

Micron Horizontal Filter

Proprietary Construction

Designed and manufactured utilising the latest filament winding machines, incorporation of non metallic fittings plus reinforced manhole openings unique to Waterco.

WATERCO

water, the liquid of life

www.waterco.com

Micron Commercial Fibreglass Filters

Designed and built for high performance and reliability

Micron Fibreglass Filters

Micron fibreglass filters embody the latest in fibreglass winding technology. Waterco's digitally controlled filament winding machine faultlessly winds continuous strands of high quality fibreglass filament under controlled tension to create a seamless one-piece vessel with refined consistency and superior quality. There are no welds or seams or special tank linings which can corrode or electrolyse.

Manufactured from the highest grade of non corrosive materials and employing the latest in fibreglass winding technology, Micron fibreglass filters are designed and built for many years of trouble free operation.

- **Available in top mount, side mount and horizontal configurations from filter areas of 0.87m² to 10.0m².**
- **Pressure rated at 250 kPa (36 psi), 400 kPa (58 psi), 600 kPa (87psi), 800kPa (116 psi) and up to 1000kpa (145 psi)**
- **Optional sight glasses and lateral man holes.**
- **Optional fibreglass reinforced vinyl ester for improved chemical resistance.**
- **NSF50, AS1210, AS4020 vessels available**
- **Multiple flange options available, e.g. ANSI, Table E, Table D**

Waterco Micron Top and Sidemount Fibreglass Filters

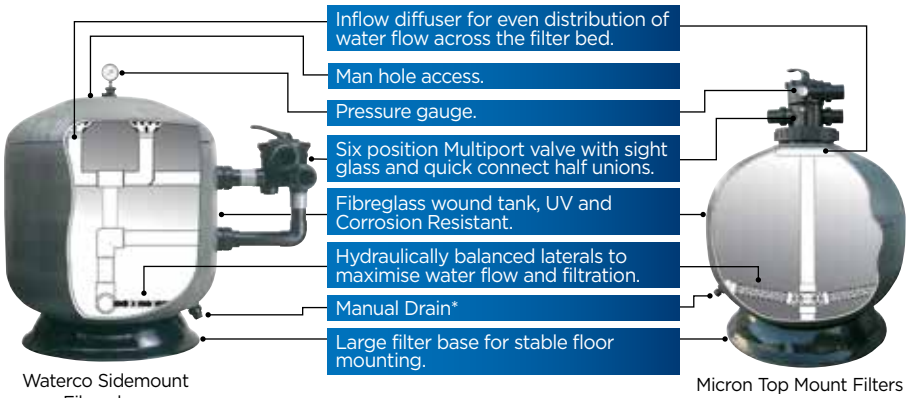

Waterco Sidemount Fibreglass

Micron Top Mount Filters

**Optional manual drain*

- Maximum working temperature of 50°C (122°F)

Micron "Fish Bone" laterals

Conventional laterals are not suitable for larger sized commercial filters. "Dead legs" exist between the laterals and water flow is not optimised through the filter bed. Waterco's "Fish Bone" lateral configuration eliminates any "dead legs" by improving water flow distribution through the filter bed.

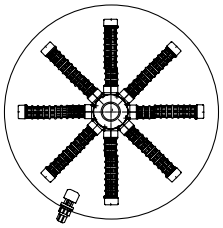

Conventional lateral configuration

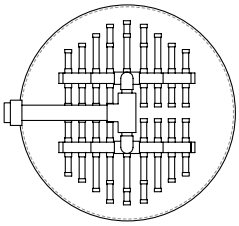

Commercial vertical filters with 3" / 80mm ports

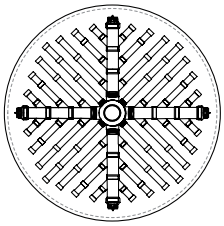

Commercial vertical filters with 2 ½" / 65mm ports as well as the SD1200 and SD1400 with 3" / 80mm ports

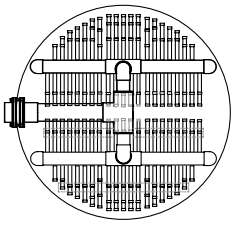

Commercial vertical filters with 4"/100mm, 6"/150mm, 8"/200mm ports

Micron Top Mount Sand Filters

Proven Strength and Durability

Lateral under drain system

COMMERCIAL TOP MOUNT SAND FILTERS

Includes Multiport Valve (2.5 Bar). Higher pressure ratings are available on request.

Part Number	Product Description	Nominal Size
2204265	S1050 c/w 65mm MPV & Barrel Unions	42"
2204865	S1200 c/w 65mm MPV & Barrel Unions	48"
22014816	S1200 c/w 80mm MPV & Barrel Unions	48"
22015616	S1400 c/w 80mm MPV & Barrel Unions	55"

Specifications

Filter Model	Port Size	Bed Depth	Inner Diameter	Filter Area	Velocities and Flows				Media Volume	Sand		ECOPURE Glass		Glass Pearls 0.6-0.8	
					30m³/hr/m²	36m³/hr/m²	40m³/hr/m²	50m³/hr/m²		kgs		kgs		kgs	
	mm	mm	mm	m²	m³/hr		m³/hr		Litres	sub lateral gravel	Sand (above lateral)	sub lateral gravel	ECO PURE Glass (above lateral)	sub lateral gravel	Glass Pearl (above lateral)
S1050	65	510	1050	0.87	26	31	35	43	503	100	635	100	522	100	702
S1200	65	580	1200	1.13	34	41	45	#57	736	129	946	129	777	129	1046
S1200	80	580	1200	1.13	34	41	45	57	760	171	939	171	772	171	1038
S1400	80	670	1400	1.54	46	55	62	#77	1229	202	1593	202	1309	202	1762

Exceed recommended maximum flow rates
* Recommended maximum flow rates for port size: 65mm/75mm(EU), 760 lpm, 45.6m³/hr
80mm/90mm(EU), 1080 lpm, 64.8m³/hr

Dimension (mm) - S series - Models with 12" & 16" Neck

Model	Valve Size	A	B	C	D	E	F	G	H	V	K
S1050 12"Neck	65	1490	1077	1045	264	1025	1309	1183	176	940	163
S1200 12"Neck	65	1615	1210	1045	264	1215	1441	1315	176	1040	173
S1200 16"Neck	80	1941	1232	1045	301	1450	1669	1561	176	1200	200
S1400 16"Neck	80	2020	1440	1200	301	1530	1748	1640	220	1275	200

All figure tolerence 1% Subject to alteration in actual production

Model	Filter Shipping Weight (2.5bar)	Shipping Volume (m³)
S1050 12"Neck	60	1.20
S1200 12"Neck	70	1.91
S1200 16"Neck	100	1.91
S1400 16"neck	150	3.18

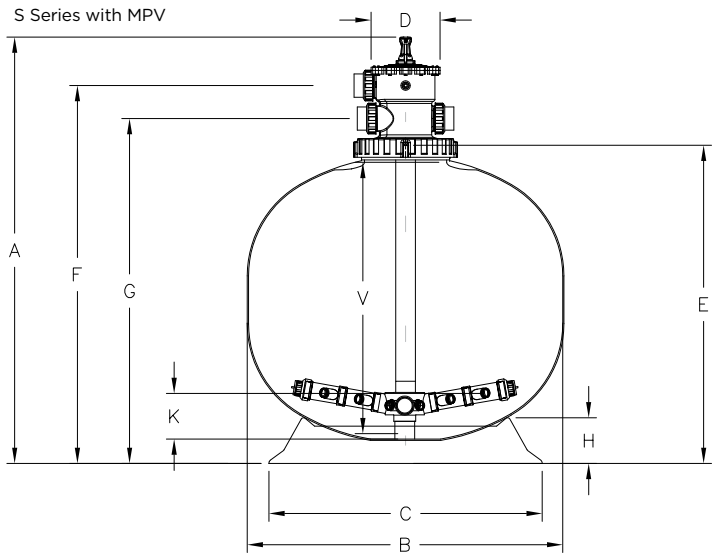

SM series (400-670mm bed depths)

Proven Strength and Durability

COMMERCIAL SIDEMOUNT SAND FILTERS

Specifications - SM Series (400 - 670mm) bed depths

Filter Model	Port Size	Bed Depth	Inner Diameter	Filter Area	Velocities and Flows				Media Volume	Sand		ECOPURE Glass		Glass Pearls 0.6-0.8	
					30m³/hr/m²	36m³/hr/m²	40m³/hr/m²	50m³/hr/m²		kgs		kgs		kgs	
	mm	mm	mm	m²	m³/hr		m³/hr		Litres	sub lateral gravel	Sand (above lateral)	sub lateral gravel	ECO PURE Glass (above lateral)	sub lateral gravel	Glass Pearl (above lateral)
SM750	50	400	750	0.44	13	16	18	22	195	34	251	34	206	34	277
SM900	50	440	900	0.64	19	23	25	#32	301	42	398	42	327	42	441
SM1050	65	470	1050	0.87	26	31	34	43	432	55	575	55	472	55	636
SM1200	65	580	1200	1.13	34	41	45	#57	705	98	932	98	766	98	1031
SM1200	80	580	1200	1.13	34	41	45	57	705	98	932	98	766	98	1031
SM1400	80	670	1400	1.54	46	55	62	#77	1130	183	1467	183	1206	183	1623
SM1600	100	670	1600	2.01	60	#72	#80	#101	1483	244	1921	244	1579	244	2125

Exceed recommneded maximum flow rates

* Recommended maximum flow rates for port size: 50mm/63mm(EU), 510 lpm, 30.6m³/hr
65mm/75mm(EU), 760 lpm, 45.6m³/hr
80mm/90mm(EU), 1080 lpm, 64.8m³/hr
100mm/110mm(EU), 1800 lpm, 108m³/hr

Dimension (mm) - SM Series - Models with 12" and 16" Neck

Model	Port Size	Valve Size	A	B	C	W	R	P	E	F	K	V	H	L	X	Y	Z	J	S	T
SM750 8" Neck	50	50	613	772	976	334	262	191	541	643	113	763	652	90	943	800	870	620	541	338
SM900 12"Neck	65	65	689	923	1140	389	298	193	670	796	113	900	750	90	1108	980	1032	620	670	370
SM1050 12"Neck	65	65	796	1077	1273	389	298	193	772	898	120	985	880	176	1241	1082	1165	1045	772	472
SM1050 16"Neck	80	80	900	1077	1310	510	363	548	790	900	220	955	1470	176	1237	1172	1165	1045	790	435
SM1200 12"Neck	65	65	873	1232	1520	389	298	193	916	1042	190	1191	1022	176	1488	1226	1412	1045	916	616
SM1200 16"Neck	80	80	1170	1232	1550	510	363	548	952	1062	190	1158	1022	176	1477	1334	1405	1045	952	596
SM1400 16"Neck	80	80	1083	1442	1645	510	363	548	926	1036	190	1279	1065	218	1572	1308	1500	1202	926	570
SM1600 16"Neck	100	-	-	1644	1927	-	-	-	-	-	205	1537	1220	218	1854	-	1782	1202	1139	707

All figure tolerence 1%
Subject to modification

Model	Filter Shipping Weight (2.5bar)	Shipping Volume
SM750	31 kg	0.8 m³
SM900	43 kg	1.1 m³
SM1050	150kg	1.3m³
SM1200	160 kg	2.14 m³
SM1400	250 kg	3.36 m³
SM1600	300 kg	4.89 m³

SM series with MPV

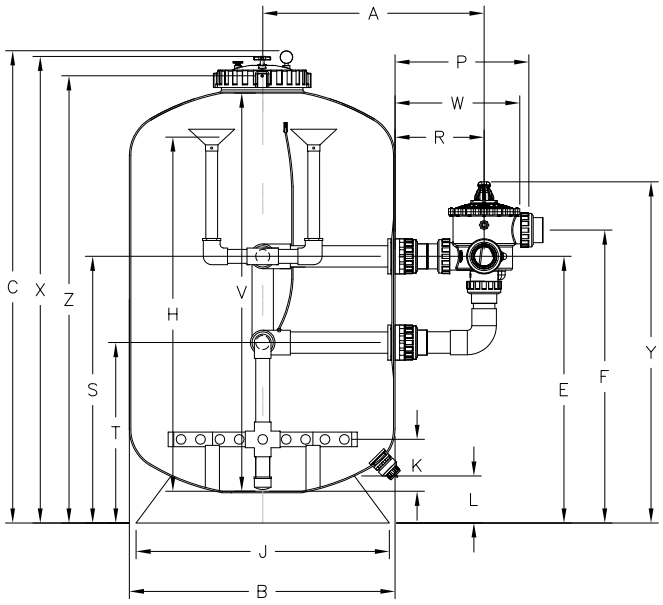

SMD Series (1000mm bed depth)

Proven Strength and Durability

COMMERCIAL SIDEMOUNT DEEP BED FILTERS (SMD)

1000mm filter bed depth ranges from 2.5 up to 10 bar

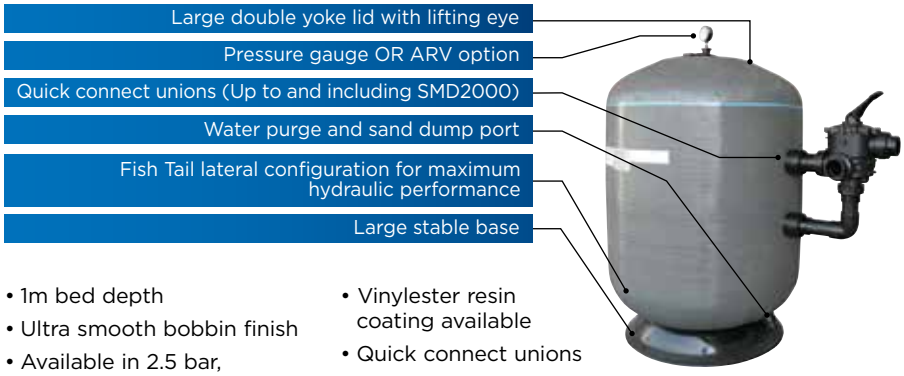

SMD series, 1m deep bed filters

The effect of deep media bed improves the filtration efficiency over standard High-rate filters by providing enhanced in-depth filtration and increased dirt capacity. In addition, the greater bed depth permits efficient use of mixed bed filter media and water treatment media such as granular activated carbon.

The filter's 1000mm media bed ensures that finer dirt particles and colloidal substances are retained to a far greater level than a filter with a shallower bed depth.

- 1m bed depth
- Ultra smooth bobbin finish
- Available in 2.5 bar, 4 bar, 6 bar, 8 bar and up to 10 bar pressure ratings
- Vinylester resin coating available
- Quick connect unions
- Nozzle plate available upon request

Specifications

Filter Model	Port Size	Bed Depth	Inner Diameter	Filter Area	Velocities and Flows				Media Volume	Sand		ECOPURE Glass		Glass Pearls 0.6-0.8	
					30m³/hr/m²	36m³/hr/m²	40m³/hr/m²	50m³/hr/m²		kgs		kgs		kgs	
	mm	mm	mm	m²	m³/hr		m³/hr		Litres	sub lateral gravel	Sand (above lateral)	sub lateral gravel	ECO PURE Glass (above lateral)	sub lateral gravel	Glass Pearl (above lateral)
SMD750	50	1000	750	0.44	13	16	18	22	459	34	636	34	522	34	703
SMD900	50	1000	900	0.64	19	23	25	32	658	42	918	42	755	42	1016
SMD900	65	1000	900	0.64	19	23	25	32	726	154	906	154	745	154	1002
SMD900	80	1000	900	0.64	19	23	25	32	699	114	906	114	745	114	1003
SMD1050	65	1000	1050	0.87	26	31	35	43	973	178	1242	178	1021	178	1374
SMD1050	80	1000	1050	0.87	26	31	35	43	966	178	1232	178	1013	178	1363
SMD1200	65	1000	1200	1.13	34	41	45	#57	1219	155	1625	155	1336	155	1797
SMD1200	80	1000	1200	1.13	34	41	45	57	1178	98	1622	98	1333	98	1794
SMD1200	100	1000	1200	1.13	34	41	45	57	1192	140	1600	140	1315	140	1770
SMD1400	80	1000	1400	1.54	46	55	62	77	1723	311	2204	311	1812	311	2438
SMD1400	100	1000	1400	1.54	46	55	62	77	1637	202	2188	202	1799	202	2420
SMD1600	80	1000	1600	2.01	60	#72	#80	#101	2171	280	2890	280	2376	280	3197
SMD1600	100	1000	1600	2.01	60	72	80	101	2096	189	2871	189	2360	189	3176
SMD1600	150	1000	1600	2.01	60	72	80	101	2123	280	2820	280	2318	280	3120
SMD1800	100	1000	1800	2.54	76	92	102	#127	2880	331	3874	331	3184	331	4285
SMD1800	150	1000	1800	2.54	76	92	102	127	2904	654	3586	654	2947	654	3966
SMD2000	100	1000	2000	3.14	94	#113	#126	#157	3521	647	4493	647	3693	647	4970
SMD2000	150	1000	2000	3.14	94	113	126	157	3490	647	4448	647	3656	647	4921

Exceed recommended maximum flow rates

* Recommended maximum flow rates for port size: 50mm/63mm(EU), 510 lpm, 30.6m³/hr
100mm/110mm(EU), 1800 lpm, 108m³/hr
65mm/75mm(EU), 760 lpm, 45.6m³/hr
150mm/160mm(EU), 3420 lpm, 205.2m³/hr
80mm/90mm(EU), 1080 lpm, 64.8m³/hr

SMD Series (1000mm bed depth)

Proven Strength and Durability

Dimension (mm) - SMD series

Model	Port Size	Valve Size	A	B	C	W	R	P	E	F	K	V	H	L	X	Y	Z	J	S	T
SMD750	50	50	613	772	1660	334	262	191	1226	1328	113	1420	1363	120	1585	1485	1560	678	1226	1023
SMD900	50	50	689	923	1733	334	262	191	1274	1376	113	1450	1363	155	1833	1533	1763	735	1274	1071
SMD900	65	65	719	923	1918	389	298	193	1300	1426	223	1580	1473	155	1833	1610	1763	735	1300	1000
SMD900	80	80	824	923	1918	510	363	548	1406	1516	190	1580	1440	155	1833	1788	1763	735	1406	1050
SMD1050	50	50	754	1110	1930	334	262	191	1265	1367	220	1605	1470	176	1845	1524	1775	1045	1265	1062
SMD1050	65	65	796	1110	1930	389	298	193	1044	1170	220	1605	1470	176	1845	1354	1775	1045	1044	744
SMD1050	80	80	918	1110	1930	510	363	548	1100	1210	220	1605	1470	176	1845	1482	1775	1045	1100	744
SMD1200	50	50	830	1229	1935	334	262	191	1285	1387	113	1590	1363	176	1850	1544	1780	1045	1285	1082
SMD1200	65	65	873	1229	1935	389	298	193	1098	1224	190	1590	1440	176	1850	1408	1780	1045	1098	798
SMD1200	80	80	977	1229	1935	510	363	548	1154	1264	150	1590	1400	176	1850	1536	1780	1045	1154	798
SMD1200	100	-	-	1229	1935	943	474	629	760	422	180	1590	1430	176	1850	-	1780	1045	1192	760
SMD1400	80	80	1083	1442	1955	510	363	548	1204	1314	250	1615	1500	218	1870	1586	1800	1202	1204	848
SMD1400	100	-	-	1442	1955	943	474	629	810	472	200	1615	1450	218	1870	-	1800	1202	1242	810
SMD1600	80	80	1184	1644	1994	510	363	548	1151	1261	220	1615	1500	218	1909	1533	1839	1202	1151	795
SMD1600	100	-	-	1644	1994	-	-	-	-	-	180	1615	1430	218	1909	-	1839	1202	1189	757
SMD1600	150	-	-	1644	1994	-	-	-	-	-	220	1615	1470	218	1909	-	1839	1202	1200	717
SMD1800	100	-	-	1839	1985	-	-	-	-	-	225	1710	1475	315	1900	-	1830	1755	1183	751
SMD1800	150	-	-	1839	1985	-	-	-	-	-	320	1710	1570	315	1900	-	1830	1755	1168	685
SMD2000	100	-	-	2042	2063	-	-	-	-	-	300	1765	1550	245	1978	-	1908	1755	1190	758
SMD2000	150	-	-	2042	2063	-	-	-	-	-	300	1765	1550	245	1978	-	1908	1755	1215	732

All figure tolerence 1%
Subject to alteration in actual production

Model	Filter Shipping Weight (2.5bar)	Shipping Volume
SMD750	58 kg	1.20 m³
SMD900	155 kg	1.80 m³
SMD1050	162 kg	2.13 m³
SMD1200	175 kg	2.80 m³
SMD1400	270 kg	3.99 m³
SMD1600	330 kg	5.28 m³
SMD1800	429 kg	6.67 m³
SMD2000	500 kg	7.86 m³

SMD series

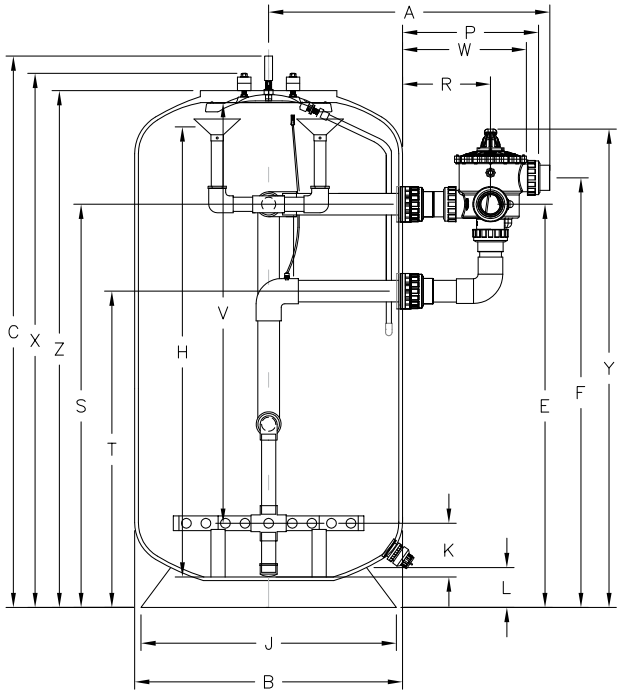

SMDD Series (1200mm bed depth)

Proven Strength and Durability

SMDD series, 1.2m deep bed Filters

The effect of deep media bed improves the filtration efficiency over standard High-rate filters by providing enhanced in-depth filtration and increased dirt capacity. In addition, the greater bed depth permits efficient use of mixed bed filter media and water treatment media such as granular activated carbon.

The filter's 1200mm media bed ensures that finer dirt particles and colloidal substances are retained to a far greater level than a filter with a shallower bed depth.

SMDD series 1200mm bed depth

COMMERCIAL SIDE MOUNT DEEP BED FILTERS (SMDD)

1200mm filter bed depth ranges from 2.5 to 10 bar

Micron Side Mount Deep Bed Sand Filter - SMDD Model

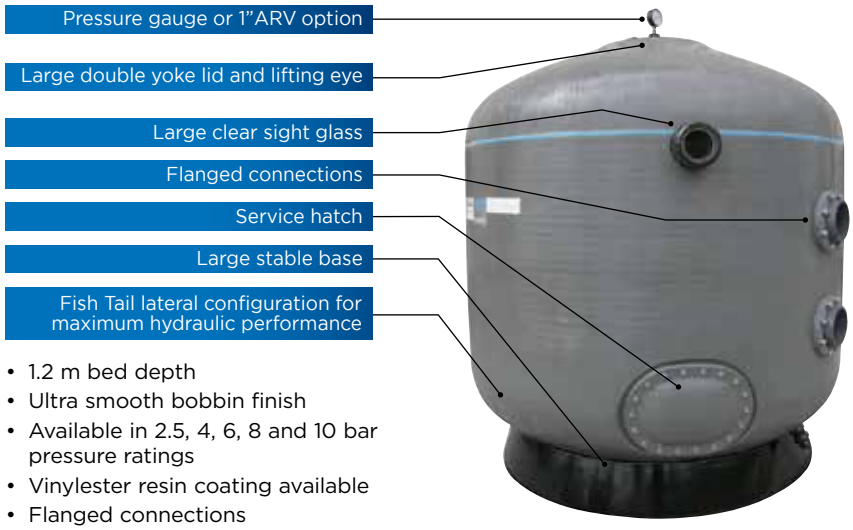

- 1.2 m bed depth
- Ultra smooth bobbin finish
- Available in 2.5, 4, 6, 8 and 10 bar pressure ratings
- Vinylester resin coating available
- Flanged connections
- Nozzle plate version (SPDD)

Specifications

Filter Model	Port Size	Bed Depth	Inner Diameter	Filter Area	Velocities and Flows				Media Volume	Sand		ECOPURE Glass		Glass Pearls 0.6-0.8	
					30m³/hr/m²	36m³/hr/m²	40m³/hr/m²	50m³/hr/m²		kgs		kgs		kgs	
	mm	mm	mm	m²	m³/hr		m³/hr		Litres	sub lateral gravel	Sand (above lateral)	sub lateral gravel	ECO-PURE Glass (above lateral)	sub lateral gravel	Glass Pearl (above lateral)
SMDD750	50	1200	750	0.44	13	16	18	22	545	34	761	34	625	34	841
SMDD900	50	1200	900	0.64	19	23	25	#32	784	42	1103	42	907	42	1220
SMDD900	65	1200	900	0.64	19	23	25	32	784	154	991	154	814	154	1096
SMDD900	80	1200	900	0.64	19	23	25	32	822	114	1086	114	893	114	1202
SMDD1050	65	1200	1050	0.87	26	31	35	43	1144	178	1492	178	1226	178	1650
SMDD1050	80	1200	1050	0.87	26	31	35	43	1140	178	1487	178	1222	178	1645
SMDD1200	65	1200	1200	1.13	34	41	45	#57	1442	155	1950	155	1603	155	2157
SMDD1200	80	1200	1200	1.13	34	41	45	57	1401	98	1947	98	1600	98	2154
SMDD1200	100	1200	1200	1.13	34	41	45	57	1414	140	1925	140	1582	140	2130
SMDD1400	80	1200	1400	1.54	46	55	62	77	2031	311	2654	311	2182	311	2936
SMDD1400	100	1200	1400	1.54	46	55	62	77	1945	202	2638	202	2168	202	2918
SMDD1600	80	1200	1600	2.01	60	#72	#80	#101	2548	244	3476	244	2857	244	3845
SMDD1600	100	1200	1600	2.01	60	72	80	101	2524	232	3453	232	2838	232	3819
SMDD1600	150	1200	1600	2.01	60	72	80	101	2575	280	3480	280	2861	280	3850
SMDD1800	100	1200	1800	2.54	76	92	102	#127	3192	289	4371	289	3592	289	4835
SMDD1800	150	1200	1800	2.54	76	92	102	127	3408	654	4321	654	3551	654	4779
SMDD2000	100	1200	2000	3.14	94	#113	#126	#157	4147	647	5408	647	4445	647	5982
SMDD2000	150	1200	2000	3.14	94	113	126	157	4171	733	5357	733	4403	733	5926
SMDD2200	150	1200	2200	3.80	114	137	152	190	5223	1130	6495	1130	5338	1130	7184
SMDD2350	150	1200	2350	4.34	130	156	173	#217	5808	1064	7416	1064	6096	1064	8204
SMDD2500	150	1200	2500	4.91	147	177	196	#255	6538	1136	8409	1136	6912	1136	9302
SMDD3000	200	1200	3000	7.07	212	254	283	353	9589	2326	11674	2326	9595	2326	12914

Exceed recommended maximum flow rates

* Recommended maximum flow rates for port size:
50mm/63mm(EU), 510 lpm, 30.6m³/hr
65mm/75mm(EU), 760 lpm, 45.6m³/hr
80mm/90mm(EU), 1080 lpm, 64.8m³/hr
100mm/110mm(EU), 1800 lpm, 108m³/hr
150mm/160mm(EU), 3420 lpm, 205.2m³/hr
200mm/200mm(EU), 6720 lpm, 403.2m³/hr

SMDD Series (1200mm bed depth)

Proven Strength and Durability

Dimension (mm) - SMDD Series

Model	Port Size	Valve Size	A	B	C	W	R	P	E	F	K	V	H	L	X	Y	Z	J	S	T
SMDD750	50	50	613	772	2112	334	262	191	1586	1688	113	1775	1713	120	2027	1845	1918	678	1586	1383
SMDD900	50	50	689	923	2268	334	262	191	1619	1721	113	1795	1713	155	2183	1878	2113	735	1619	1416
SMDD900	65	65	719	923	2268	389	298	193	1624	1750	223	1930	1823	155	2183	1934	2113	735	1624	1324
SMDD900	80	80	824	923	2268	510	363	548	1680	1790	190	1930	1780	155	2183	2062	2113	735	1680	1324
SMDD1050	50	50	766	1110	2270	334	262	191	1600	1702	220	1950	1820	176	2185	1859	2115	1045	1600	1397
SMDD1050	65	65	796	1110	2270	389	298	193	1594	1720	220	1950	1820	176	2185	1904	2115	1045	1594	1294
SMDD1050	80	80	918	1110	2270	510	363	548	1650	1760	220	1950	1820	176	2185	2032	2115	1045	1650	1294
SMDD1200	50	50	842	1229	2243	334	262	191	1512	1614	113	1900	1713	176	2158	1771	2088	1045	1512	1309
SMDD1200	65	65	873	1229	2243	389	298	193	1609	1735	190	1900	1790	176	2158	1919	2088	1045	1609	1309
SMDD1200	80	80	977	1229	2243	510	363	548	1665	1775	150	1900	1750	176	2158	2047	2088	1045	1665	1309
SMDD1200	100	-	-	1229	2243	-	-	-	-	-	180	1900	1780	176	2158	-	2088	1045	1315	883
SMDD1400	80	80	1083	1442	2313	510	363	548	1618	1728	250	1970	1850	218	2228	2000	2158	1202	1618	1262
SMDD1400	100	-	-	1442	2313	-	-	-	-	-	200	1970	1800	218	2228	-	2158	1202	1330	898
SMDD1600	80	80	1184	1644	2285	510	363	548	1330	1492.7	205	1950	1805	218	2200	1765	2130	1202	1383	1027
SMDD1600	100	-	-	1644	2285	-	-	-	-	-	200	1950	1800	218	2200	-	2130	1202	1421	989
SMDD1600	150	-	-	1644	2285	-	-	-	-	-	220	1950	1820	218	2200	-	2130	1202	1383	900
SMDD1800	100	-	-	1839	2260	-	-	-	-	-	210	2010	1810	315	2175	-	2105	1755	1298	866
SMDD1800	150	-	-	1839	2260	-	-	-	-	-	320	2010	1920	315	2175	-	2105	1755	1383	900
SMDD2000	100	-	-	2042	2398	-	-	-	-	-	300	2100	1900	245	2313	-	2243	1755	1310	878
SMDD2000	150	-	-	2042	2398	-	-	-	-	-	320	2100	1920	245	2313	-	2243	1755	1310	827
SMDD2200	150	-	-	2245	2415	-	-	-	-	-	380	2090	1980	245	2330	-	2260	1755	1386	903
SMDD2350	150	-	-	2390	2485	-	-	-	-	-	355	2118	1955	340	2330	-	2330	2037	1500	1017
SMDD2500	150	-	-	2575	2510	-	-	-	-	-	355	2190	1955	340	2405	-	2405	2037	1494	1011
SMDD3000	200	-	-	3045	2890	-	-	-	-	-	465	2490	2065	417	2785	-	2785	2660	1688	1205

All figure tolerence 1%
Subject to modification

Model	Filter Shipping Weight (2.5bar)	Shipping Volume
SMDD750	66 kg	1.14 m³
SMDD900	172 kg	2.06 m³
SMDD1050	181 kg	2.97 m³
SMDD1200	223 kg	3.48 m³
SMDD1400	275 kg	5.32 m³
SMDD1600	352 kg	6.93 m³
SMDD1800	377 kg	7.64 m³
SMDD2000	590 kg	10.2 m³
SMDD2200	800 kg	12.41 m³
SMDD2350	916 kg	13.82 m³
SMDD2500	1033 kg	16.64 m³

SMDD series

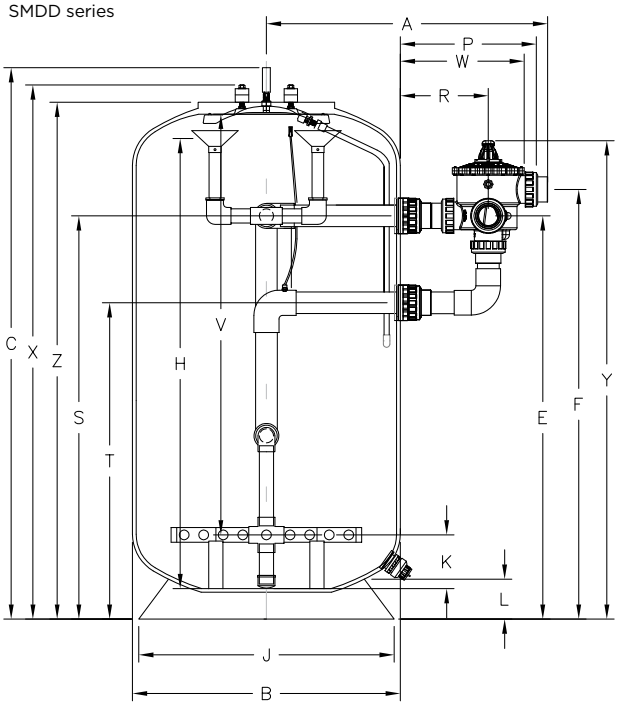

SPDD Nozzle Plate Filters
(1200mm bed depth and AS4020 option)

MICRON NOZZLE PLATE SIDE MOUNT DEEP BED FILTERS

1200mm filter bed depth ranges from 2.5 to 10 bar

The nozzle plate system also allows the introduction of pressurised air directly into the bottom of the filter media. Uniform introduction of air and water through the nozzle plate provides vigorous agitation and filter media bed expansion required for an effective air/water backwash leading to reduced backwashing times and reduced volumes of water. Save up to 25% of backwash water.

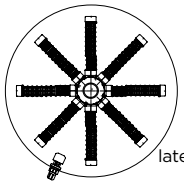

Conventional lateral configuration

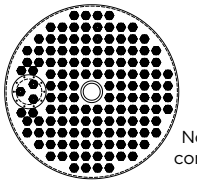

Nozzle plate configuration

Micron SPDD Nozzle Plate Filters
Micron SPDD filters are fitted with a plate and nozzle system, which ensures uniform flow for both filtering and backwashing, ensuring maximum performance through the media bed.

Specifications

Filter Model	Port Size	Bed Depth	Inner Diameter	Filter Area	Velocities and Flows				Media Volume	Sand	ECOPURE Glass	Glass Pearls 0.6-0.8
					30m³/hr/m²	36m³/hr/m²	40m³/hr/m²	50m³/hr/m²				
	mm	mm	mm	m²	m³/hr		m³/hr		Litres	kgs	kgs	kgs
SPDD900	80	1200	900	0.64	19	23	25	32	750	1095	900	1211
SPDD1050	80	1200	1050	0.87	26	31	35	43	1017	1485	1221	1463
SPDD1200	80	1200	1200	1.13	34	41	45	57	1322	1930	1586	2135
SPDD1200	100	1200	1200	1.13	34	41	45	57	1322	1930	1586	2135
SPDD1400	80	1200	1400	1.54	46	55	62	#77	1808	2640	2170	2920
SPDD1400	100	1200	1400	1.54	46	55	62	77	1808	2640	2170	2920
SPDD1600	80	1200	1600	2.01	60	#72	#80	#101	2380	3475	2856	3844
SPDD1600	100	1200	1600	2.01	60	72	80	101	2366	3455	2840	3822
SPDD1800	100	1200	1800	2.54	76	92	102	#127	2993	4370	3592	4834
SPDD1800	150	1200	1800	2.54	76	92	102	127	2966	4330	3559	4790
SPDD2000	100	1200	2000	3.14	94	#113	#126	#157	3705	5410	4447	5984
SPDD2000	150	1200	2000	3.14	94	113	126	157	3671	5360	4405	5929
SPDD2200	150	1200	2200	3.80	114	137	152	190	4473	6530	5367	7223
SPDD2350	150	1200	2350	4.34	130	156	174	#217	5089	7430	6107	8219
SPDD2500	150	1200	2500	4.91	147	177	196	#245	5760	8410	6912	9303
SPDD3000	200	1200	3000	7.07	212	255	283	353	7997	11675	9596	12914
SPDD3000	250	1200	3000	7.07	212	255	283	353	8010	11695	9612	12937

Exceed recommended maximum flow rates

* Recommended maximum flow rates for port size:
50mm/63mm(EU), 510 lpm, 30.6m³/hr
65mm/75mm(EU), 760 lpm, 45.6m³/hr
80mm/90mm(EU), 1080 lpm, 64.8m³/hr
100mm/110mm(EU), 1800 lpm, 108m³/hr
150mm/160mm(EU), 3420 lpm, 205.2m³/hr
200mm/200mm(EU), 6720 lpm, 403.2m³/hr
250mm/280mm(EU), 8930 lpm, 535.8m³/hr

Nozzle Plate under drain system

Internal Nozzle Plate Service Hatch

SPDD Nozzle Plate Filters
(1200mm bed depth and AS4020 option)

Dimension (mm) - SPDD series

Model	Port Size	B	C	K	V	H	L	X	Z	J	S	T
SPDD900	80	923	2368	190	1930	1780	155	2183	2113	735	1680	1324
SPDD1050	80	1110	2370	220	1950	1820	176	2185	2115	1045	1650	1294
SPDD1200	80	1229	2343	180	1900	1750	176	2158	2088	1045	1665	1309
SPDD1200	100	1229	2343	180	1900	1780	176	2158	2088	1045	1315	883
SPDD1400	80	1442	2413	200	1970	1860	218	2228	2158	1202	1618	1262
SPDD1400	100	1442	2413	200	1975	1800	218	2228	2158	1202	1330	898
SPDD1600	80	1644	2385	205	1950	1805	218	2200	2130	1202	1383	1027
SPDD1600	100	1644	2385	200	1950	1800	218	2200	2130	1202	1421	989
SPDD1800	100	1839	2360	210	2010	1810	315	2175	2105	1755	1298	866
SPDD1800	150	1839	2360	320	2010	1920	315	2175	2105	1755	1383	900
SPDD2000	100	2042	2498	300	2100	1900	245	2313	2243	1755	1310	878
SPDD2000	150	2042	2498	320	2100	1920	245	2313	2243	1755	1310	827
SPDD2200	150	2245	2500	355	2090	1946	245	2315	2245	1755	1386	903
SPDD2350	150	2390	2585	355	2118	1955	340	2330	2330	2037	1500	1017
SPDD2500	150	2575	2660	355	2190	1955	340	2405	2405	2037	1494	1011
SPDD3000	200	3040	3061	465	2495	2065	419	2871	2760	2660	1746	1146
SPDD3000	250	3040	3061	504	2495	2091	419	2871	2760	2660	1746	1210

All figure tolerence 1%
Subject to modification

Model	Filter Shipping Weight (2.5bar)	Shipping Volume
SPDD1050	199 kg	2.94 m³
SPDD1200	245 kg	3.70 m³
SPDD1400	303 kg	5.27 m³
SPDD1600	387 kg	6.87 m³
SPDD1800	415 kg	7.57 m³
SPDD2000	649 kg	10.0 m³
SPDD2350	1008 kg	13.91 m³

SPDD aseries

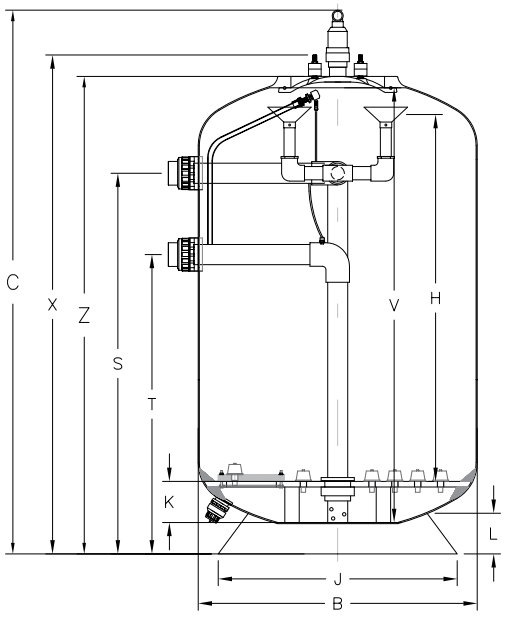

Micron Horizontal Filters

Designed and built for high performance and reliability

MICRON COMMERCIAL HORIZONTAL FILAMENT WOUND FILTERS

ranges from 2.5 to 10 bar (10 bar not available in all models)

Micron Horizontal vessels are also available with a nozzle plate. The nozzle plate provides even distribution of air scouring and backwashing.

For the ultimate filtration solution of large filter bed area and effective backwashing, Micron Horizontal Nozzle Plate vessels are the perfect choice.

Micron Horizontal's lateral system reduces backwash run times, saves water and produces flatter more uniform filter media bed after backwashing.

Micron Horizontal Filters

The Micron Horizontal Filter is a space-saving high performer; its compact horizontal design allows installation with minimum waste of space. The shape of the Micron horizontal filter is both attractive and functional. The spherical ends are designed to give uniform flow from both inlet and outlet collection assemblies. Micron Horizontal filters are available with a 500mm (M) filter media bed and a 1200mm (MD) filter media bed.

Micron Horizontal filters include hydraulically efficient distribution manifolds, ensuring balanced circulation and filtration.

1 Elliptical positive sealing manways.
2 Flanged port of up to 10".
3 Hydraulically balanced distribution and lateral system.
4 Fibreglass wound tank, UV and corrosion resistant.
5 Large stable filter base for stable floor mounting.
6 Manual drain.

Micron Horizontal Filters

Designed and built for high performance and reliability

Model	Filter Shipping Weight (2.5bar)	Shipping Volume
M2500	170 kg	4.6 m³
M3750	270 kg	6.5 m³
M5000	410 kg	9.2m³

Specifications - Micron Horizontal Filters - M Series

Filter Model	Port Size	Bed Depth	Inner Diameter	Filter Area	Velocities and Flows				Media Volume	Sand		ECOPURE Glass		Glass Pearls 0.6-0.8	
					30m³/hr/m²	36m³/hr/m²	40m³/hr/m²	50m³/hr/m²		kgs		kgs		kgs	
	mm	mm	mm	m²	m³/hr		m³/hr		Litres	sub lateral gravel	Sand (above lateral)	sub lateral gravel	ECO-PURE Glass (above lateral)	sub lateral gravel	Glass Pearl (above lateral)
M2500	100	500	1260	2.50	75	90	100	#125	1452	435	1685	435	1385	435	1864
M3750	150	500	1260	3.75	113	135	150	188	2370	691	2769	691	2276	691	3063
M5000	150	500	1260	5.00	150	180	200	#259	3192	1064	3596	1064	2955	1064	3977

Exceed recommended maximum flow rates
* Recommended maximum flow rates for port size: 100mm/110mm(EU), 1800 lpm, 108m³/hr
150mm/160mm(EU), 3420 lpm, 205.2m³/hr

Dimension (mm) - M Series

Model	Port Size	A	C	W	R	L	E	F	G	H	M
M2500	100	2245	1620	740	1300	1400	1005	1260	150	255	2327
M3750	100	3230	1620	740	1300	2520	1005	1260	150	255	3312
M3750	150	3230	1620	740	1300	2520	945	1260	150	275	3312
M5000	150	4220	1620	740	1300	3570	945	1260	150	275	4301

All figure tolerence 1%
Subject to modification

Horizontal deep bed filter - M & MD series

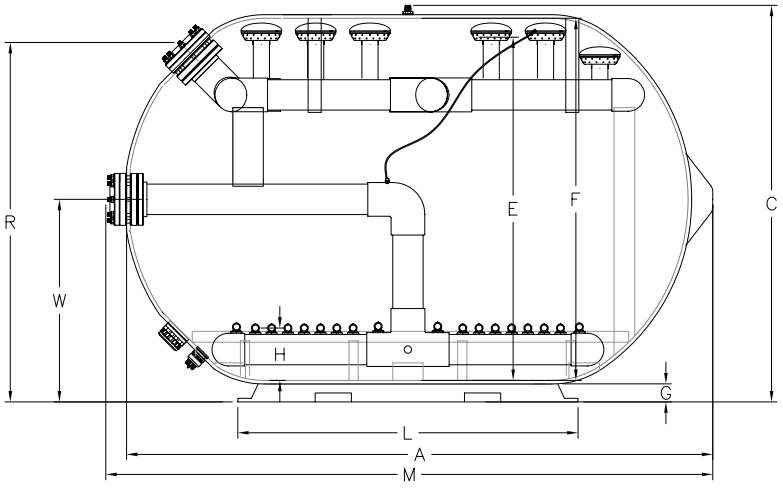

Larger sizes and nozzle plate options next page

Micron Horizontal Filters

Designed and built for high performance and reliability

Model	Filter Shipping Weight (2.5bar)	Shipping Volume
MD5000	879 kg	11.7 m³
MD5500	590 kg	17.0 m³
MD6500	1110 kg	18.3 m³
MD8000	1450 kg	22.0 m³
MD10000	2110 kg	26.7 m³

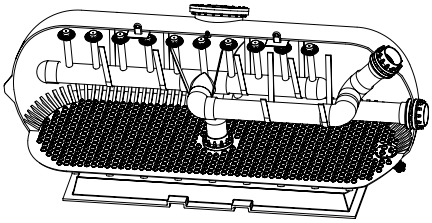

Waterco manufactures horizontal nozzle plate filters with up to 10m² filter area and 1,200mm filter media bed depth - the largest fibreglass filter to receive AS/NZS 4020:2005 certification from the Australian Water Quality Centre.

Specifications - Micron Horizontal Deep Bed Filters - MD Series

Filter Model	Port Size	Bed Depth	Inner Diameter	Filter Area	Velocities and Flows				Media Volume	Sand		ECOPURE Glass		Glass Pearls 0.6-0.8	
					30m³/hr/m²	36m³/hr/m²	40m³/hr/m²	50m³/hr/m²		kgs		kgs		kgs	
	mm	mm	mm	m²	m³/hr		m³/hr		Litres	sub lateral gravel	Sand (above lateral)	sub lateral gravel	ECO-PURE Glass (above lateral)	sub lateral gravel	Glass Pearl (above lateral)
MD5000	150	1200	2000	5.0	150	180	200	#250	5788	774	7676	774	6309	774	8491
MD5500	150	1200	2000	5.5	165	198	#220	#275	6356	847	8433	847	6931	847	9329
MD6500	200	1200	2000	6.5	195	234	260	325	7548	1066	9954	1066	8182	1066	11011
MD8000	200	1200	2000	8.0	240	288	320	400	9795	1402	12898	1402	10601	1402	14628
MD10000	250	1200	2000	10.0	300	360	400	500	12116	1964	15726	1964	12926	1964	17396

Exceed recommended maximum flow rates

* Recommended maximum flow rates for port size: 150mm/160mm(EU), 3420 lpm, 205.2m³/hr
200mm/200mm(EU), 6720 lpm, 403.2m³/hr
250mm/280mm(EU), 8930 lpm, 535.8m³/hr

**design backwash velocity*

Dimension (mm) - MD Series

Model	Port Size	A	C	W	R	L	E	F	G	H	M
MD5000	150	2920	2190	1120	1988	1630	1889	2000	230	289	3026
MD5500	150	3252	2190	1120	1988	1880	1889	2000	230	289	3330
MD6500	200	3765	2190	1120	2020	2405	1890	2000	230	290	3890
MD8000	200	4516	2190	1120	2020	3155	1890	2000	230	290	4640
MD10000	250	5500	2190	1150	2050	4055	1890	2000	230	330	5650

All figure tolerence 1%
Subject to modification

Specifications - Micron Horizontal Deep Bed - MPD Series

Filter Model	Port Size	Bed Depth	Inner Diameter	Filter Area	Velocities and Flows				Media Volume	Sand	ECOPURE Glass	Glass Pearls 0.6-0.8
	mm	mm	mm	m²	30m³/hr/m²	36m³/hr/m²	40m³/hr/m²	50m³/hr/m²	Litres	kgs	kgs	kgs
					m³/hr		m³/hr					
MPD6500	200	1200	2000	6.50	195	234	260	325	7055	10300	8466	11393
MPD80000	200	1200	2000	8.00	240	288	320	400	8699	12700	10438	14048
MPD10000	250	1200	2000	10.00	300	360	400	500	10959	16000	13151	17699

* Recommended maximum flow rates for port size: 200mm/200mm(EU), 6720 lpm, 403.2m³/hr
250mm/280mm(EU), 8930 lpm, 535.8m3/hr

Dimension (mm) - MPD Series

Model	Port Size	A	C	W	R	L	E	F	G	H	M
MPD6500	200	3765	2190	1120	2020	2405	1890	2000	230	286	3890
MPD8000	200	4516	2190	1120	2020	3155	1890	2000	230	330	4640
MPD10000	250	5500	2190	1150	2050	4055	1890	2000	230	330	5650

All figure tolerence 1%
Subject to modification

Horizontal deep bed filter - MPD series

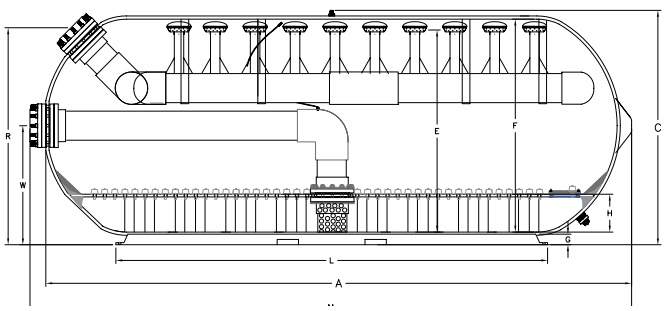

Optional Extras

Proven Strength and Durability

Ask us for more customised options

Micron Side Mount Deep Bed Optional Extras

Waterco Micron Side Mount Deep Bed Commercial filters are now available with the option of:

1. 50mm, 80mm, 100mm or 150mm sight glasses.
2. 200mm, 320mm to 420mm x 320mm lateral manholes.
3. Fibreglass reinforced vinyl ester for improved resistance.
4. Extra reinforcement to increase the working pressure rating to 600 kPa (87psi) and 800 kPa (116 psi).

COMMERCIAL FIBREGLASS: OPTIONAL EXTRAS

Product Description
Sight Glass 50mm applicable to SMD/SMDD400 to 2500
Sight Glass 80mm applicable to SMD/SMDD900 to 2500
Sight Glass 100mm applicable to SMD/SMDD1050 to 2500
Lateral Manhole 420mm x 320mm applicable to SMD/SMDD/SPDD1200 and above; and MD
Lateral Manhole 320mm dia applicable to SMD/SMDD/SPDD1050 and above; and M/MD1200 to 2500
Lateral Manhole 200mm applicable to SMD/SMDD/SPDD600 and above; and M/MD
Top Manhole 600mm available SMDD/SPDD1200 diameter and above, and MD/MPD8000 and MD/MPD10000

AS1210 (BSEN13121) construction standard
AS4020 drinking water standard (SPDD and MPD series only)
Vinyl Ester lining

Side hatch / Lateral manhole cover

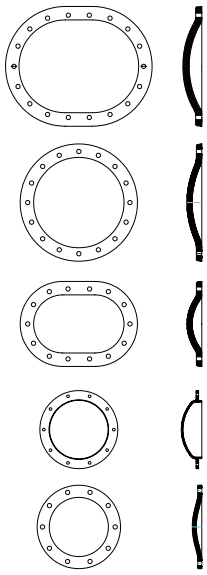

Sight Glass

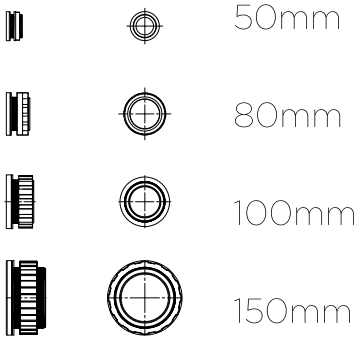

Top manhole 600mm with 2" ARV

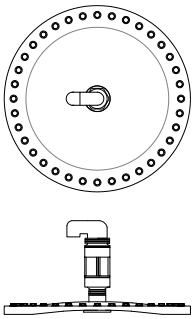

Additional custom ports available

DUAL PRESSURE GAUGE PANEL

Part Number	Product Description
621640	Dual Pressure Gauge Panel Pewter suitable up to 4 bar only

Waterco's Dual Pressure Gauge Panel is an extremely versatile pressure measurement and test instrument. It can simultaneously display the output of two pressure gauges, so that you can accurately monitor the filter's pressure drop.

Hydron Split Tanks

Designed for water treatment and commercial swimming pool facilities, built using the lasts in gel coated fibreglass technology.

- **Durable**
- **Easy to maintain**
- **Flanged tank port connections**
- **Perfect for retrofit**
- **Easy transport**
- **Flexible configurations available**
- **Sight glass available**

HYDRON SPLIT TANKS

Part Number	Product Description	Nominal Size
	Filter only	
223912008014	Hydron Split Filter 1200h 3"FL LCN	48"
223914008014	Hydron Split Filter 1400h 4"FL LCN	56"
223916008014	Hydron Split Filter 1600h 4"FL LCN	64"
223918008014	Hydron Split Filter 1800h 6"FL LCN	72"

Ideal for retrofitting

Hydron Split tank can be delivered in two parts and assembled on site in the plant room. The two halves seal perfectly using a double o ring and are held together by a flange using bolts and nuts. The filter is specifically designed to fit through existing standard size plant room doors.

Technical Specifications

Filter Model	Port Size	Bed Depth	Inner Diameter	Filter Area	Velocities and Flows				Media Volume	Sand		ECOPURE Glass		Glass Pearls 0.6-0.8	
					30m³/hr/m²	36m³/hr/m²	40m³/hr/m²	50m³/hr/m²		kgs		kgs		kgs	
	mm	mm	mm	m²	m³/hr		m³/hr		Litres	sub lateral gravel	Sand (above lateral)	sub lateral gravel	ECO-PURE Glass (above lateral)	sub lateral gravel	Glass Pearl (above lateral)
SMDT 1200	80	1200	1200	1.13	34	41	45	57	1401	98	1947	98	1600	98	2154
SMDT 1400	100	1200	1400	1.54	46	55	62	77	1945	202	2638	202	2168	202	2918
SMDT 1600	100	1200	1600	2.01	60	72	80	101	2524	232	3453	232	2838	232	3819
SMDT 1800	150	1200	1800	2.54	76	92	102	127	3408	654	4321	654	3551	654	4779

**design backwash velocity for sand or glass media*

Dimensions (mm)

Model	A	B	C	D	E	F	G	H
SMDT 1200	1010	1095	700	749	2088	2245	1045	1521
SMDT 1400	1008	1165	700	814	2170	2330	1200	1737
SMDT 1600	995	1130	700	829	2130	2285	1200	1943
SMDT 1800	1105	1100	700	789	2188	2355	1760	2105

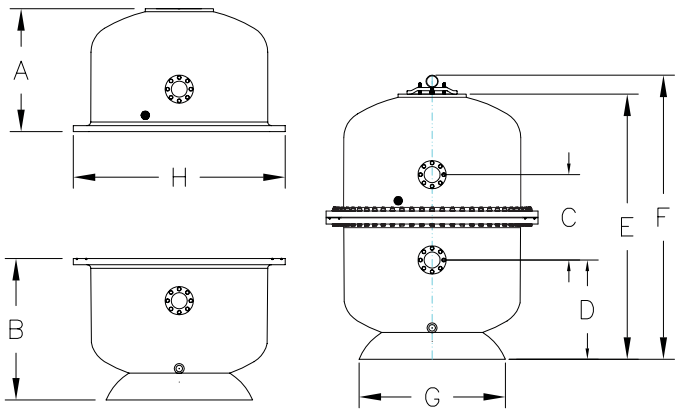

MICRON
COMMERCIAL FIBREGLASS FILTERS

Proven Strength and Durability

Setting new global benchmarks in durability, versatility, reliability and longevity, Waterco's Micron fibreglass filters are the preferred choice for commercial and industrial operations that demand superior water quality.

Multiport Valves

Heavy duty construction

MPV KITS FOR MICRON SAND FILTERS

Part Number	Product Description	
2280422	TM40mm MPV Clamp w BU	Thermoplastic T400 - T600 Clamp Type
228042	TM40mm MPV c/w BU	Micron S500 - S700
2280441	TM40mm MPV c/w BU (6way 4bar)	Micron S500 - S700
228053	TM50mm MPV c/w BU	Micron S702 - S1200 Micron SD750, SD900
2280600	TM65mm MPV w B Union	Micron S1050 w 12" neck
228800	TM80	TM 80mm MPV c/w B Union 16" neck
2290421	SM40mm MPV	Micron SM400 - SM600 8" neck w 40mm Micron SMDD600 8" neck w 40mm
2290491	SM40mm MK2 MPV c/w P.Kit	Micron SM600 8" neck w 50mm
2390495	DE SM40mm MPV c/w P.Kit	Astra DE P2027
22905120	SM50mm MPV c/w P.Kit	Micron SM700 - SM900 8" neck w 50mm Micron SMDD750 - SMDD900 8" neck w 50mm Micron SMDD1050 w 50mm connection
23905832	DE SM50mm MPV c/w P.Kit	Astra DE P2036, P2048
22905010	SM/SMD/SMDD 65mm MPV c/w P.Kit	Micron SM1050 65mm w 12" neck Micron SM1200 65mm w 12" neck
2290820	SM80mm MPV c/w P.Kit	Micron SM1050 - SM1600 w 80mm Micron SMDD900 - SMDD1400 w 80mm
2291005	SM100mm MPV c/w P.Kit	Micron SM1600 - SM2000

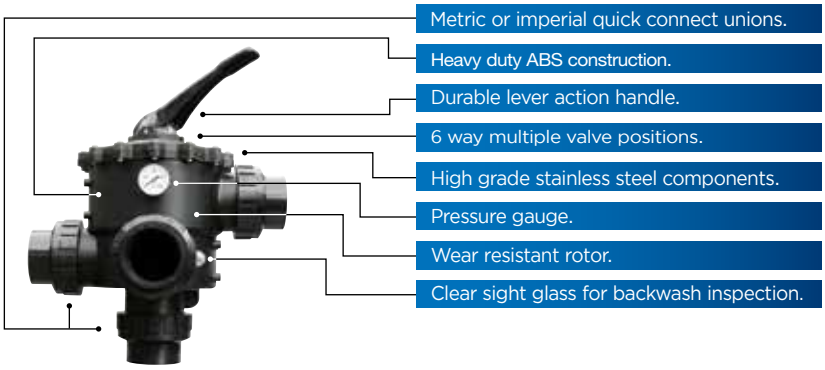

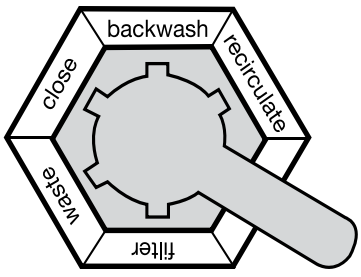

Multiport Valve Main Functions

Filter - downward flow through the filter bed to outlet

Backwash - upward flow through the filter bed to waste

Rinse - downward flow through the filter bed to waste

Waste - bypass the filter bed to waste

Re-circulate - bypass the filter bed to outlet

Closed - no flow to the filter

Warranty

Waterco Multiport valves are covered by 1 year warranty.

Multiport Valves

Heavy duty construction

Cleansing a filter simply requires shifting the Multiport lever from the “filter” position to the “backwash” position, which reverses the flow of water in the filter, flushing the filter bed.

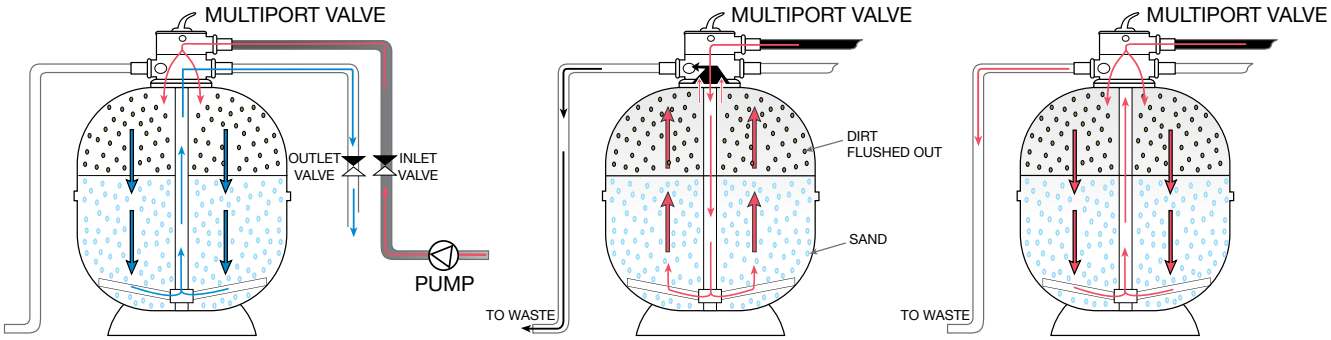

Side Mount Configuration

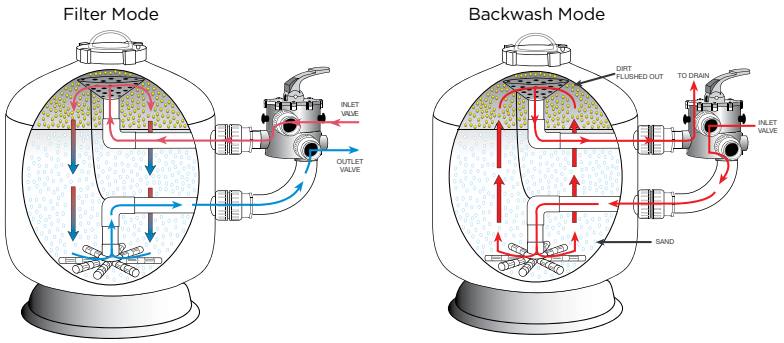

Aquabiome

Mechanical and Biological Filtration

Effective
Excellent Nitrification and Mechanical filtration.

Efficient
Hydraulically efficient filter design, balanced slotted laterals to maximize water flow and filtration.

Durable
Corrosion resistant and UV stabilised for outdoor installation.

Air-Backwash
Air assisted hydraulic backwash, saving time and water.

Superior Quality
Aquabiome fibreglass filters embody the latest in fibreglass winding technology.

AQUABIOME SKID

Part Number	Product Description
220008160	Aquabiome SM400 (Filter only)
220008165	Aquabiome SM400
220008240	Aquabiome SM600 (Filter only)
220008245	Aquabiome SM600
220008360	Aquabiome SM900 (Filter only)
220008365	Aquabiome SM900

Specifications

Aquabiome	ASM400	ASM600	ASM900
Nominal Diameter mm / inch	400 / 16	600 / 24	900 / 35
Filter Surface Area m²/ ft²	0.13 / 1.4	0.3 / 3.2	0.64 / 7.15
Media Volume litres / gallons (US)	43 / 11.3	117 / 30.9	303 / 80
Media Weight kg / lbs	21.5 / 47.4	58.5 / 128.9	151.5 / 334
Biofilter Surface Area m² / ft²	47.3 / 509	128.7 / 1385	333.3 / 3588
Inlet / Outlet Connections	40mm / 50mm 1½" / (EU)	40mm / 50mm 1½" / (EU)	50mm / 63mm 2" / (EU)
Min - Max Flow Rate			
lpm	52 - 101	120 - 226	255 - 509
m³/hr	3.1 - 6.1	7.2 - 13.5	15.3 - 30.5
gpm (US gallon per min)	13.7 - 26.7	31.7 - 59.7	67.4 - 134.5
Max Pond Size litres / gallons (US)	13,000 / 3,434	36,000 / 9,500	90,000 / 24000
Feed Rate kg / lbs per day	0.32 / 0.71	0.9 / 1.98	2.4 / 5.29
Total Ornamental Fish weight* kg / lbs	10.7 / 23.6	30 / 66.1	80 / 176.4
Total Aquaculture Fish weight* kg / lbs	32 / 70.5	90 / 198	240 / 529
Tank Diameter mm / inch	421 / 16.5"	622 / 24.5"	923 / 36.3"
Overall Height mm / inch	856 / 33.7"	880 / 34.6"	1115 / 43.9"
Valve Size mm / inch	40 / 1½"	40 / 1½"	50 / 2"
Bed Depth mm / inch	290 / 11.4"	360 / 14.2"	440 / 17.3"

** Maximum fish stocking weight depends on the percentage of body weight fed daily.*
- *Ornamental fish weight based on feeding rate of 3% of body weight.*
- *Aquaculture fish weight based on feeding rate of 1% of body weight.*

Dimensions (mm)

Aquabiome	L (mm)	W (mm)	H (mm)
SM400	815	650	886
SM600	1040	650	925
SM900	1328	930	1110

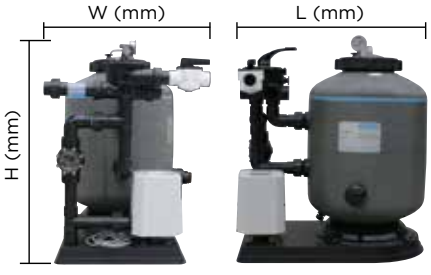

4mm - 5mm
Biofilter Media

AQUABIOME MEDIA

Part Number	Product Description	Nominal Size
3532550	Aquabiome media (25kg / 50L bag)	per kg

AQUABIOME

Mechanical & Biological Filtration

Excellent nitrification & mechanical filtration

Aquabiome filters can be backwashed hydraulically with its Multiport Valve

Custom-made Bio Beads for effective mechanical & biological filtration

WATERCO

water, the liquid of life

www.waterco.com

WATERCO

water, the liquid of life

Water Treatment

Micron W Series

Enjoy clear water through your whole house

- **Effective Filtration**
- **Minimal Maintenance**
- **Dependable Strength and Durability**

MICRON W FILTERS

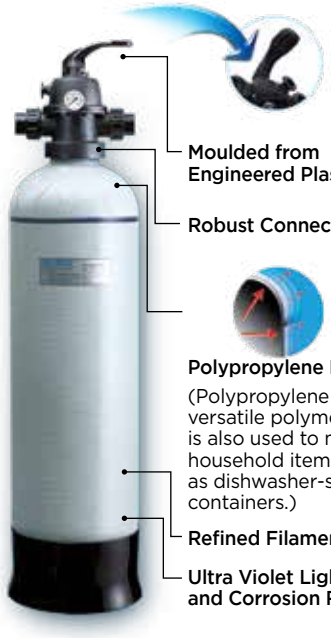

Strength and Durability

A Micron W's innovative design and superior construction techniques provide it the strength to cope with working pressures up to 700kPa. (Equivalent to 71 tonnes per square meter.)

Refined Filament Winding

Waterco's advanced filament winding machine winds continuous strands of fibreglass onto the filter's inner tank to strengthen the filter so that it is able to withstand high water pressures as well as fluctuating water pressures.

Warranty

Product	Full Warranty	Pro-Rata Warranty
• W250/W300	5 years	Not applicable

** Please refer to Waterco's warranty terms and conditions.*

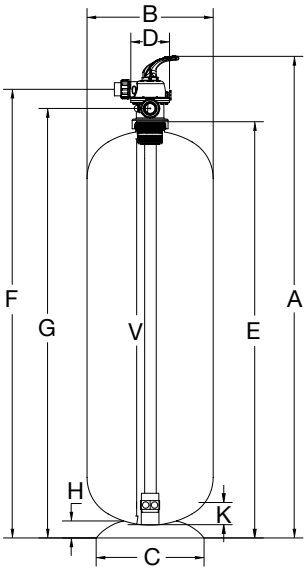

By the use of a Waterco lock ring you can adapt W and WD filters to take an automatic water treatment valve.

855172	Valve Lock Ring 4" male neck (Waterco) to 2.5" female 8 NPSM
855174	Valve Lock Ring 4" male neck (Waterco) to 4" female 8 UN

Micron W Series

Deep Bed Filters

Comes with filter internals pre-installed!

Technologically Advanced

Micron filters consist of a blow moulded inner shell of fibreglass reinforced polyester resin strengthened with multiple layers of continuous strands of fibreglass filament.

Micron filters are wound with precision by Waterco's digital filament winding machines, for refined consistency and superior quality.

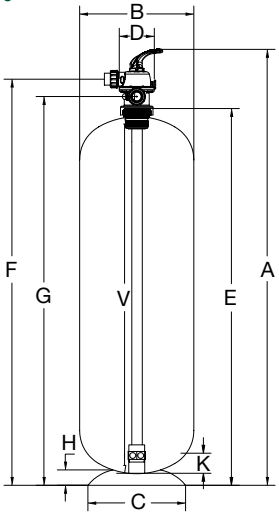

MICRON W FILTERS - tank only 7 bar pressure rating

Part Number	Product Description
Backwashable Deep Bed granular filters 7 Bar pressure rating	
2247250	Micron W250 7BAR 4"N/RING tank only
22473011	Micron W300 7BAR 4"N/RING tank only
22473571	Micron W350 7BAR 4"N/RING tank only
22474071	Micron W400 7BAR 4"N/RING tank only
22475071	Micron W500 7BAR 4"N/RING tank only
22476071	Micron W600 7BAR 4"N/RING tank only
22477071	Micron W700 7BAR 4"N/RING tank only

MICRON W FILTERS - with MPV 7 Bar pressure rating

Part Number	Product Description
Backwashable Deep Bed granular filters 7 Bar pressure rating	
224725010	Micron W250 (700kPa) - c/w 40mm 5 way MPV
22473010	Micron W300 (700kPa) - c/w 40mm 5 way MPV
22473570	Micron W350 (700kPa) - c/w 40mm 5 way MPV
22474070	Micron W400 (700kPa) - c/w 40mm 5 way MPV
22475070	Micron W500 (700kPa) - c/w 40mm 5 way MPV
22476070	Micron W600 (700kPa) - c/w 40mm 5 way MPV
22477070	Micron W700 (700kPa) - c/w 40mm 5 way MPV

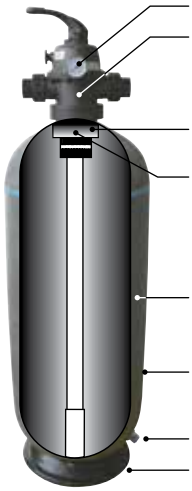

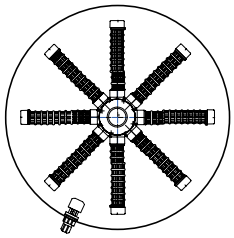

Conventional lateral configuration in W & WD Series applies to models W400 to WD900 only

Base locking clip riser pipe

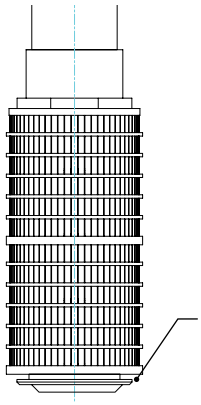

Waterco's W and WD filters have a special feature that locks the riser pipe into the base of the vessel to prevent the pipe from lifting out of the filter when the automatic or manual valve is removed for servicing. Only applies to filter range 250 to 350.

Warranty

Product	Full Warranty	Pro-Rata Warranty
1. Residential applications	2 years	3 years
2. Commercial applications	2 years	Not applicate

** Please refer to Waterco's warranty terms and conditions.*

Specifications

Filter Model	MPV Size	Filter Bed Depth	Filter Bed Area	Filtration Flow Rates 36m³/hr/m²		Backwash Flow Rates 40m³/hr/m²		Filter Bed Volume	Sand 16/30	Glass Pearls 0.6-0.8
	mm	mm	m²	lpm	m³/hr	lpm	m³/hr	litres	kg	kg
W250	40	600	0.05	30	1.8	33	2	41	60	66
W300	40	600	0.07	42	2.5	47	2.8	58	85	94
W350	40	600	0.10	60	3.6	67	4	79	115	127
W400	40	600	0.13	78	4.7	87	5.2	79	115	158
W500	40	600	0.20	120	7.2	133	8	123	180	199
W600	40	600	0.28	168	10.1	187	11.2	175	255	282
W700	40	600	0.38	228	13.7	253	15.2	240	350	387

Dimensions (mm)

Model	A	B	C	D	E	F	G	H	V	K
W250	1385	268	304	160	1119	1252	1172	162	955	180
W300	1366	322	346	160	1100	1233	1153	175	955	180
W350	1397	366	355	160	1130	1262	1183	63	1010	180
W400	1377	416	355	160	1110	1242	1163	63	995	76
W500	1415	518	443	160	1148	1280	1201	69	1014	76
W600	1402	620	540	160	1135	1267	1188	88	992	76
W700	1407	720	540	160	1140	1272	1193	88	1015	86

Micron WD Series

Deep Sand Filters

Micron WD filters are designed with filter bed depths of 1000mm providing enhanced filtration and increased contact time.

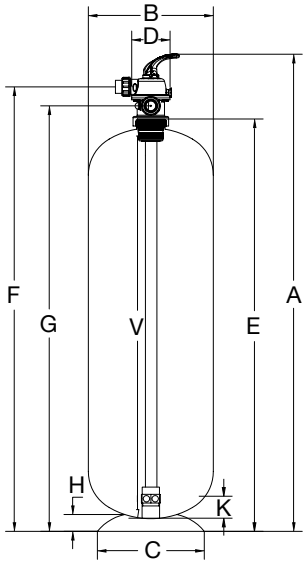

MICRON WD FILTERS - Tank ONLY 7 Bar pressure rating

Part Number	Product Description
22483071	Micron WD300 7BAR 4"N/RING tank only
22483571	Micron WD350 7BAR 4"N/RING tank only
22484071	Micron WD400 7BAR 4"N/RING tank only
22485071	Micron WD500 7BAR 4"N/RING tank only
22486071	Micron WD600 7BAR 4"N/RING tank only
22487071	Micron WD700 7BAR 4"N/RING tank only

MICRON WD FILTERS - with MPV 7 Bar pressure rating

Part Number	Product Description
22483070	Micron WD300 (700kPa) - c/w 40mm 5 way MPV
22483570	Micron WD350 (700kPa) - c/w 40mm 5 way MPV
22484070	Micron WD400 (700kPa) - c/w 40mm 5 way MPV
22485070	Micron WD500 (700kPa) - c/w 40mm 5 way MPV
22486070	Micron WD600 (700kPa) - c/w 40mm 5 way MPV
22487070	Micron WD700 (700kPa) - c/w 40mm 5 way MPV

Specifications

Filter Model	MPV Size	Filter Bed Depth	Filter Bed Area	Filtration Flow Rates 36m³/hr/m²		Backwash Flow Rates 40m³/hr/m²		Filter Bed Volume	Sand 16/30	Glass Pearls 0.6-0.8
	mm	mm	m²	lpm	m³/hr	lpm	m³/hr	litres	kg	kg
WD300	40	1000	0.07	42	2.5	47	2.8	86	125	138
WD350	40	1000	0.10	60	3.6	67	4	116	170	188
WD400	40	1000	0.13	78	4.7	87	5.2	129	188	208
WD500	40	1000	0.20	120	7.2	133	8	199	290	321
WD600	40	1000	0.28	168	10.1	187	11.2	288	420	465
WD700	40	1000	0.38	228	13.7	253	15.2	394	575	636

Dimensions (mm)

Model	A	B	C	D	E	F	G	H	V	K
WD300	1977	315	301	160	1710	1841	1762	75	1590	180
WD350	1997	366	356	160	1730	1861	1782	63	1612	180
WD400	1987	416	356	160	1720	1851	1772	63	1595	76
WD500	2009	518	443	160	1742	1873	1794	69	1600	76
WD600	1997	620	540	160	1730	1861	1782	88	1582	76
WD700	2002	720	540	160	1735	1866	1787	88	1622	86

Warranty

Product	Full Warranty	Pro-Rata Warranty
1. Residential applications	2 years	3 years
2. Commercial applications	2 years	Not applicate

** Please refer to Waterco's warranty terms and conditions.*

Multiport Valves

Heavy duty construction

MPV

Part Number	Product Description	
2280262	TM 40mm 5-way MPV	Micron W250 Filter
	TM 40mm 5-way MPV	Micron W300 MKII Filter
	TM 40mm 5-way MPV	Micron W250Fn Filter
	TM 40mm 5-way MPV	Micron W300Fn Filter
2280262	TM 40mm 5 way valve	Micron W350 w 4" neck
		Micron W400 w 4" neck
		Micron W500 w 4" neck
		Micron W600 w 4" neck
		Micron W700n 4" neck
2280262	TM 40mm 5 way valve	Micron WD300 w 4" neck
		Micron WD350 w 4" neck
		Micron WD400 w 4" neck
		Micron WD500 w 4" neck
		Micron WD600 w 4" neck
		Micron WD700 w 4" neck

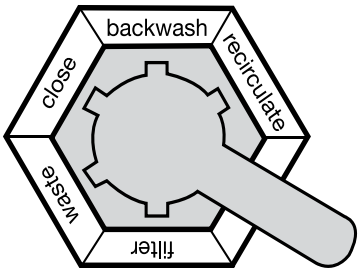

Multiport Valve Main Functions

Filter - downward flow through the filter bed to outlet

Backwash - upward flow through the filter bed to waste

Rinse - downward flow through the filter bed to waste

Waste - bypass the filter bed to waste

Re-circulate - bypass the filter bed to outlet

Closed - no flow to the filter

Cleansing a filter simply requires shifting the Multiport lever from the "filter" position to the "backwash" position, which reverses the flow of water in the filter, flushing the filter bed.

Fleck Valves

Automated Valve

Waterco's unique thread protection ring reduces the possibility of damage to critical treads and locks in place the top riser pipe while covering the riser pipes hole form being accidently filled with media on commissioning.

MICRON AUTOMATED VALVES

Part Number	Product Description
72535601	Fleck 5600 SXT Automatic Softener Valve Assembly
72532752	Fleck 2750SXT Automatic Valve Assembly - BB
72532753	Fleck 2750NXT Automatic Valve Assembly - BB - RS
72532852	Fleck 2850sSXT Automatic Valve Assembly - BB
72532853	Fleck 2850sNXT Automatic Valve Assembly - BB - RS
72533151	Fleck 3150NXT Automatic Valve Assembly - BB - RS
72533152	Fleck 3150NXT Automatic Valve Assembly - BB – SM

Automatic controllers that use electronic technology to control the filtration and water softening processes. The regeneration (backwash) can be initiated automatically by one of the multiple options offered by the controller: metered (demand), time clock, day override or by a remote signal. They are available in different models and configurations to fulfil the technical specifications required by the application.

CONTROLERS

NXT - Network controller uses on board communication capabilities to allow remote start regeneration (e.g. by differential pressure switch) and link multiple valves via an off the shelf CAT5, or better.

SXT - Large LCD display for filtration and softener systems and a user selectable time clock or metered function.

AUTOMATIC VALVES

Fleck 5600
- Domestic Water Softening Applications
- Plastic body (Noryl)
- Filter Size Recommended: W250 - W350
- Connections: 20 mm

Fleck 2750
- Industrial Filtration Applications
- Brass body
- Filter Size Recommended: W250 - W400
- NXT and SXT version
- Connections: 25 mm

Fleck 2850s
- Industrial Filtration Applications
- Brass Body
- Filter Size Recommended: W400 - W700
- NXT and SXT version
- Connections: 40 mm

Fleck 3150
- Industrial Filtration Applications
- Brass Body
- Filter Size Recommended: W700 and SM filters
- NXT version only
- Side Mount adaptor Available for Side Mount Filter Application
- Connections: 50 mm

TBF Bag Filters

TBF housings are constructed from high impact polypropylene to be compatible with a wide range of fluids and its ergonomic screw down lid is designed for simple hand operation allowing for a quick filter changeover.

- **Ideal as a coarse pre-filter/ leaf trapper**
- **Disposable filter bags**
- **One piece mould construction**
- **Able to withstand up to 6 Bar/600kPa/87 psi**

COMMANDOMATIC TBF HOUSING 6 Bar / 87psi

Part Number	Product Description
	Polypropylene Housing for Bag Filtration
3761050EU	C50 TBF Housing
37610750EU	C75 TBF Housing

Specifications

Model	TBF C50	TBF C75
Filter Area m²(ft²)	0.17 (1.85)	0.27 (2.9)
Max. Flow Rate, Residential, lpm (gpm)	55.4 (14.8)	88.0 (23.2)
Max. Flow Rate, Commercial, lpm (gpm)	20.7 (5.5)	32.9 (8.7)
Required Clearance For Servicing, mm (inch)	530 (20.9)	770 (30.3)

Design Filtration Rate: Residential : 326 lpm/m² (8 gpm/ft²)
Commercial : 122 lpm/m² (3 gpm/ft²)

Dimensions (mm)

Model	A	B	C	D	E	F	G
C50	710mm	665mm	620mm	71mm	263mm	278.5mm	402mm
C75	960mm	915mm	870mm	71mm	263mm	278.5mm	402mm

TBF POLYPROPYLENE FILTER BAGS

Part Number	Product Description
	For C50
3651931	1 Micron Filter Bag
3651924	5 Micron Filter Bag
3651925	25 Micron Filter Bag
3651926	50 Micron Filter Bag
36519265	800 Micron Filter Bag
	For C75
36519310	1 Micron Filter Bag
36519240	5 Micron Filter Bag
36519250	25 Micron Filter Bag
36519260	50 Micron Filter Bag
36519266	800 Micron Filter Bag

Filter Bag Dimensions	C50	C75
Surface Area	0.17m² / 1.85ft²	0.27m² / 2.9ft²
Diameter	178mm / 7"	178mm / 7"
Length	419mm / 16.5"	660mm / 26"

Filter Bag Specifications	C50	C75
Material	Polyester*	Polyester*
Specific Gravity	0.91	0.91
Abrasion & Flex	Very Good	Very Good
Weak Acids	Excellent	Excellent
Strong Acids	Excellent	Excellent
Weak Alkali	Excellent	Excellent
Strong Alkali	Excellent	Excellent
Solvents	Fair	Fair

Cartridge Filters

The Slimline takes up a mere 250 cm² of valuable floor space. Not only is it smart on design. The lock ring lid makes cartridge removal and replacement so easy. No additional tools are needed.

SLIMLINE FILTER

Part Number	Product Description
45552510	Slimline CC25 Filter (empty)
4555251	Slimline CC25 Filter c/w 30 micron cartridge element 4 Bar
AF1060	Filter stand for 4555251
62051	Slimline Filter Cartridge 30 Micron
620510	Slimline Filter Cartridge 5 Micron

The Slimline takes up a mere 250cm² of valuable floor space. Not only is it smart in design, the lock ring lid makes cartridge removal and replacement so easy. No additional tools are needed.

Dimensions (mm)

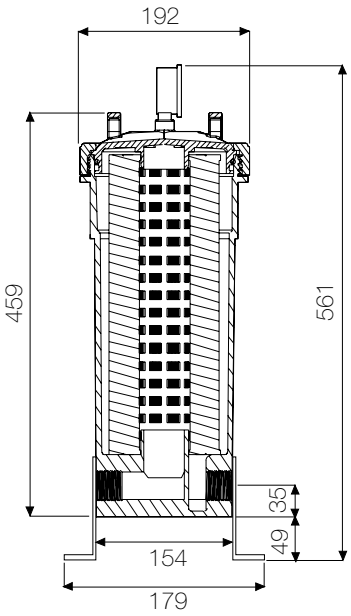

Slimline Filter Cartridge

Constructed of long-lasting and reusable polyester fabric.

Has multiple compact pleats providing 2.3 metres of surface area - maximum dirt holding, reduces cleaning frequency.

Specifications

Working Pressure : 4 bar / 58 psi
Maximum Temperature : 40˚C (100˚F)
Tank : Polypropylene
Tank ports : 25mm female BSP thread
Lock Ring : Glass-filled polypropylene
Element : Polyester fabric material, PU end caps, ABS core
Pressure Drop : 0.2 bar / 2.9psi
Seals : Niltrile rubber

Micron Rating	5, 30	**Diameter**	127mm
Max. Flow	5.7m³/hr	**Tank Ports**	25mm BSP thread
Surface Area	2.3m²	**Working Pressure**	4 Bar
Length	340mm	**Max. temperature**	40°(100°F)

Cartridge Filters

COMMANDOMATIC TBF HOUSING 6 Bar / 87psi

Part Number	Product Description
	Polypropylene Housing for Cartridge and/or Granular Filtration Purposes. Filter supplied with both 1½" imperial & 50mm metric quick connect unions.
2150253EU	C25 TCF (empty)
2150503EU	C50 TCF (empty)
2150753EU	C75 TCF (empty)

COMMANDOMATIC TCF COMPLETE UNITS - 6 Bar

Part Number	Product Description
21502531EU	C25 Cartridge Filter c/w 30 micron cartridge
21505031EU	C50 Cartridge Filter c/w 30 micron cartridge
20507531EU	C75 Cartridge Filter c/w 30 micron cartridge

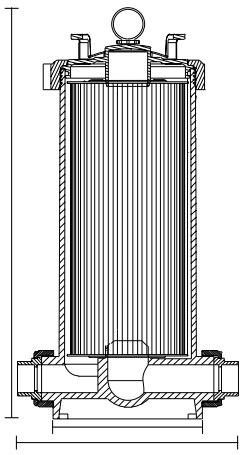

TCF Compact Filter is a compact and economical Cartridge Filter built with an easy to use lock ring system for simple cartridge removal and replacement.

Model	Height (mm)	Width (mm)	Tank Diameter (mm)
C25	-	384	259
C50	720	384	259
C75	970	384	259

COMMANDOMATIC TCF CARTRIDGES

Part Number	Product Description
	Pleated Polyester Filter Cartridges
620401	C25 1 micron cartridge
62040	C25 30 micron cartridge
62041	C50 5 micron Cartridge
62043	C75 5 micron Cartridge
620411	C50 10 micron Cartridge
620431	C75 10 micron Cartridge
6204220	C50 20 micron Cartridge
6204420	C75 20 micron Cartridge
62042	C50 30 micron Cartridge
62044	C75 30 micron Cartridge

The pleated filter cartridge is constructed from heavy duty, easy-to-clean polyester fabric. The Cartridge's pleats allow for more surface area and a lower pressure loss compared to depth type filter cartridges

Model	Max. Flow Rate	Cartridge Micron Ratings	Maximum Pressure Drop	Surface Area	Cartridge Length	Cartridge Diameter
C25	5.7m³/hr	5, 10, 20, 30	0.2 Bar / 2.9 psi	2.3m² (25ft²)	240mm	185mm
C50	11.40m³/hr	5, 10, 20, 30	0.2 Bar / 2.9 psi	4.6m² (50ft²)	490mm	185mm
C75	16.50m³/hr	5, 10, 20, 30	0.2 Bar / 2.9 psi	6.9m² (75ft²)	740mm	185mm

Cartridge Filters

TCF GRANULAR MEDIA CARTRIDGE COMPONENTS

Part Number	Product Description
3651922	Trimline Bottle (c/w slots) 12 litre capacity
3651923	Trimline Bottle (w/o slots) 12 litre capacity
644771	TCF sealing washer
W02046	TCF cartridge spacer
6340116	TCF cartridge spacer 'O' ring
	TCF Granular Media Pre-Filter Cartridges
62031	C25 5 micron Cartridge
620311	C25 10 micron Cartridge
6204020	C25 20 micron Cartridge
62040	C25 30 micron Cartridge

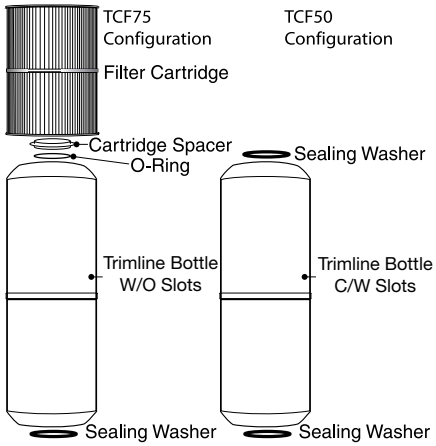

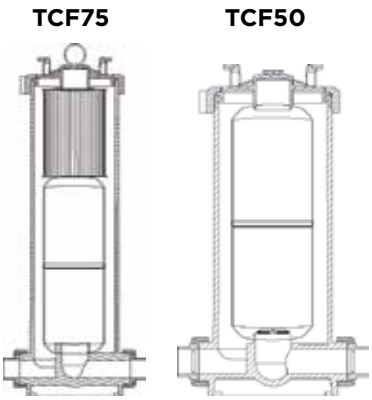

Pleated Filter Cartridges

The Pleated Filter Cartridges are fabricated from pleated reusable polyester fabric. The media has been pleated to provide 2.3 to 6.9 square metres of surface area in order to maximise the cartridge dirt holding capacity and extend the time between cleaning.

Material : Polyester Fabric material, Vinyl Plastisol end caps, Polypropylene core

Operating Temperature : 4°C to 50°C

Maximum Pressure Drop : 0.2 bar / 2.9 psi

Granular Media Cartridges

The granular media cartridges are able to house 12 litres of filter media and are designed to allow water to enter via the top of the cartridge and flow through the full height of the filter bed before exiting at the bottom of the cartridge.

WATERCO
water, the liquid of life

Media

Glass Pearls

Advanced Filter Media

Manufactured from pure glass, Glass Pearls are a new generation of filter media, capable of providing water of superior clarity.

Its spherical shape results in low coefficient of friction, reducing backwash requirements, saving pool owners both time and water.

- **3 micron nominal filtration**
- **20% less backwash water**
- **High purity**
- **Safe and smooth**
- **Time saving**
- **0.6mm to 0.8mm in size**

GLASS PEARLS

Part Number	Product Description
35320011	Glass Pearl Media 0.6 – 0.8mm

Superior Clarity

Glass Pearls have a small effective size of only 0.6mm to 0.8mm. Its narrow particle size range allows in-depth filtration and extends operating cycles between backwashing. Glass Pearls have been laboratory tested to be able to effectively filter down to below 3 microns.

Save Water

Glass Pearls spherical smooth shape, results in a low co efficient of friction, reducing its backwash water requirements. Glass Pearls backwashes with up to 20% less water than sand, saving time and water.

High Purity

Glass Pearls are manufactured from pure glass and chemically inert. Glass Pearls have been independently lab tested for leeching contaminants and found to be well within Australian Drinking Water Guidelines.

Safe and Smooth

Glass Pearls are spherical and do not have any sharp edges. They are safe to handle and safe to service. If there is ever a failure of the filter's laterals and Glass Pearls flow into the swimming pool, they pose no risk of injury to swimmers.

Time Saving

Glass Pearls are easy to install and enables a rapid start up of the media filter. Its high purity means very little backwashing is required to cleanse the filter media, prior to commissioning the filter.

Technical Specifications	
Filtration Media	Glass Pearl
Effective Size (mm)	0.61
Uniformity Coefficient	1.21
Bulk Density	1.61
Mohs Hardness	7.0

Chemical Compositions	
Silicon dioxide (SiO_2)	70.00 – 75.00%
Sodium oxide (Na_2O)	12.00 – 15.00%
Calcium oxide (CaO)	7.00 – 12.00%
Magnesium oxide (MgO)	approx. 5.00%
Aluminium oxide (AL_2O_3)	approx. 2.50%
Potassium oxide (K_2O)	approx. 1.50%

enviropro
SAVE TIME, WATER AND ENERGY

ECOPURE GLASS MEDIA

Grade 1 equivalent to 16/30 Grade sand

Grade 3 equivalent to 6mm gravel

ECOPURE GLASS MEDIA

Part Number	Product Description	Nominal Size
35320014	Grade 1 (0.5mm -1mm)	25kg bag
	Grade 3 (3mm - 6mm)	25kg bag

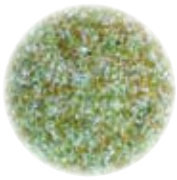

Grade 1
0.5mm-1mm

Waterco Glass media has the green credentials, and with its superior performance is also cost effective in comparison to sand.

Waterco Glass media has many benefits over sand:

- **Waterco Glass media is more efficient**
  It removes 30% more material and pollutants than sand, so saving on backwashing and the resultant water, energy and chemical treatment costs

Grade 3
3mm-6mm

- **Waterco Glass media keeps cleaner**
  It is less susceptible to bio-fouling. As the product is heat treated surfaces are smooth, so requiring less remedial action and again less chemical treatment to kill pollutants

- **Waterco Glass media doesn't degrade**
  It therefore has a longer life span

- **Waterco Glass media**
  Is suitable for both commercial and domestic applications

Centrifugal Filtration

- ✓ Minimises filter maintenance and saves water
- ✓ No filter media to clean or replace
- ✓ Suitable for new and existing installations

MultiCyclone 70XL
A commercial Multicylone to cater for higher flow rates up to 90m³/hr.

MultiCyclone PRO
High Pressure (6.9 Bar) version for water treatment applications.

MultiCyclone
Mulit-award winning pre-filtration device that works on the basis of centrifugal water filtration.

enviropro
SAVE TIME, WATER AND ENERGY

SAVE WATER SAVE TIME

WATERCO
water, the liquid of life
www.waterco.com

Pre-Filter

MULTICYCLONE 70XL COMMERCIAL

Centrifugal Pre-filtration

WATERCO MULTICYCLONE FILTER

Part Number	Product Description	Nominal Size
200394	MultiCyclone 70XL	100mm
239070	MultiCyclone XL70 Auto Purge System 1 actuator	

The MultiCyclone 70XL is an evolution of Waterco's MultiCyclone technology. Waterco has specially created a commercial version by increasing its number of hydrocyclones to cater for the higher flow rates and redesigned to cope with the demanding requirements of commercial installations.

The MultiCyclone 70XL has been specially created to handle larger water capacities for commercial and industrial application.

- Maximum flow rate of 90m³/hr
- Suitable for new and existing commercial installations

Specifications

Model	Connection Ports	Minimum Flow	Maximum Flow	Maximum Pressure
MultiCyclone 70 XL Commercial	100mm	36m³/hr	90m³/hr	3.5Bar/50psi/350kPa

Dimensions (mm)

Model	A	B	C	D	E	F	G	H	I
MultiCyclone Commercial Pre-Filter	710 mm	623.3 mm	542.5 mm	498.9 mm	400 mm	543.6 mm	498.9 mm	780.7 mm	1353.4 mm

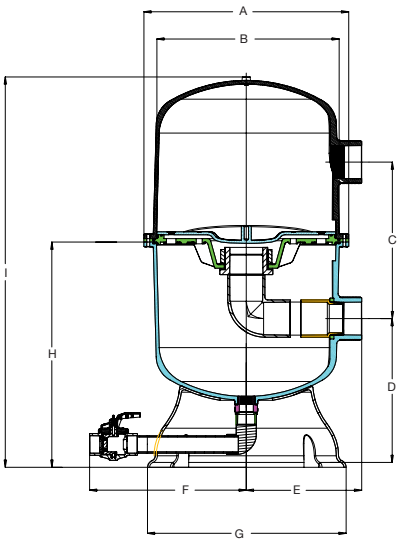

MultiCyclone 70XL Head Loss Curve

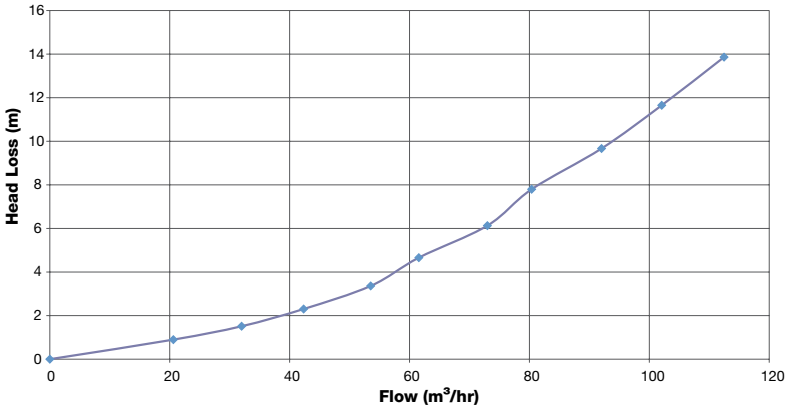

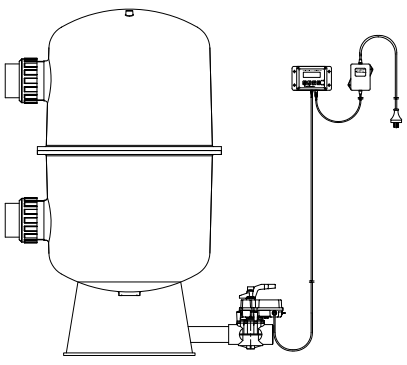

MultiCyclone XL70 Auto Purge System 1 actuator

enviropro
SAVE TIME, WATER AND ENERGY

MULTICYCLONE Auto Purge System

Centrifugal Pre-filtration 7 Bar

MULTICYCLONE AUTO PURGE SYSTEM

Part Number	Product Description
239073	MultiCyclone 12/16 Auto Purge System 1 actuator
239072	MultiCyclone 12/16 Auto Purge System 2 actuators

The MultiCyclone Auto Purge System is designed to automatically control the purging of captured debris collected by Waterco's residential or commercial MultiCyclone's and uses the latest controller system for easy operation.

- Setable 1 to 99 day purging cycle interval
- Setable 3 to 180 second purging duration
- Setable 5 to 60 second valve rotating time, 25sec default

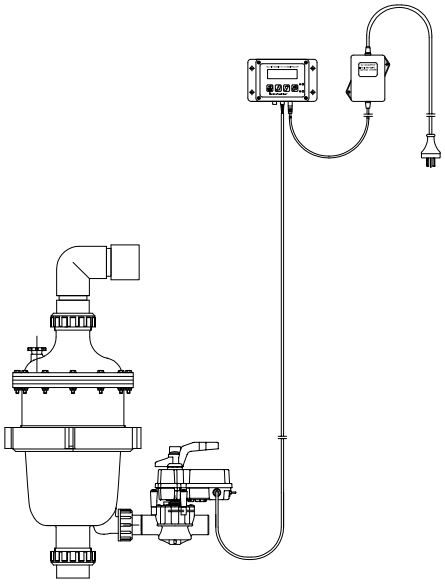

MultiCyclone 12/16 Auto Purge System 1 actuator

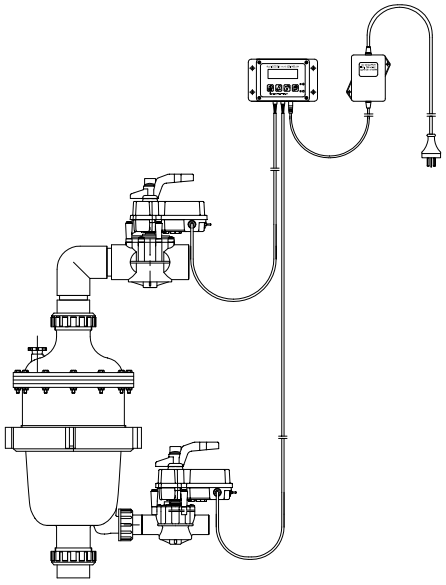

MultiCyclone 12/16 Auto Purge System 2 actuators

MULTICYCLONE PRO

Centrifugal Pre-filtration 7 Bar

Waterco's award winning MultiCyclone is a brilliant pre-filtration device that works on the basis of centrifugal water filtration and is designed with no moving parts and no filter media to clean or replace.

- **Minimises filter maintenance and saves water**
- **No filter media to clean or replace**
- **Suitable for new and existing installations**
- **2 year warranty**

Maintenance

The MultiCyclone is easily cleaned by opening its purge valve. Only 15 litres of water is discharged to cleanse the MultiCyclone.

MULTICYCLONE PRO

Part Number	Product Description	Nominal Size
200385	MultiCyclone Pro	50mm

Centrifugal water filtration

The Multi yclone works on the basis of centrifugal water filtration. There are no moving parts to wear and tear, and no filter media to clean or replace.

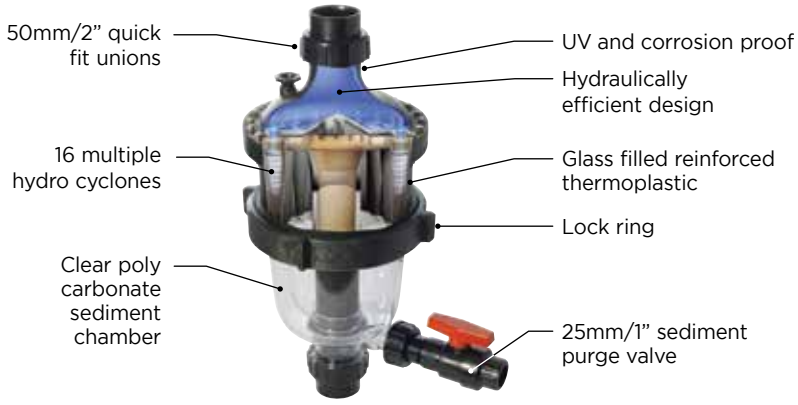

i. Incoming water enters 16 hydro cyclones tangentially, generating a strong centrifugal effect.

ii. The sediment is spun out to the hydro cyclone's wall, and then spirals down to the sediment chamber*.

iii. The filtered water migrates towards the centre of the hydro cyclone where the flow reverses and spirals upwards through the outlet.

iv. Accumulation of sediment can be visibly monitored through the MultiCyclone's clear sediment chamber.

*Note: The MultiCyclone is designed to filter sediment that is heavier than water, floating debris cannot be filtered out by centrifugal filtration.

Technical Specifications

Model	Connection Ports	Minimum Flow	Maximum Flow	Maximum Pressure
MultiCyclone 16	50mm / 2"	50 lpm / 3m³/hr	500 lpm / 30m³/hr	690 kPa (100psi)

Dimension (mm/in)

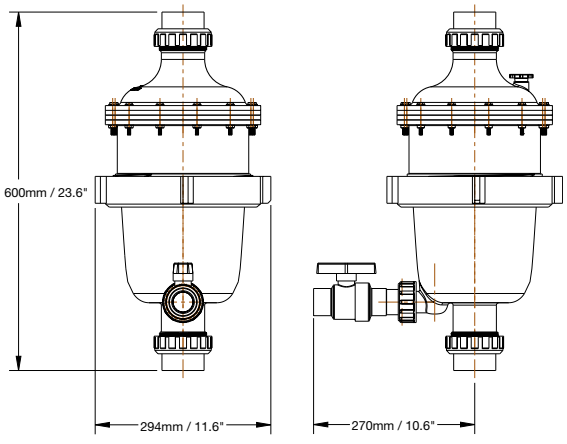

enviropro
SAVE TIME, WATER AND ENERGY

MULTICYCLONE 12 & 16

Centrifugal Pre-filtration 3.5 Bar

SAVE CHEMICALS
SAVE WATER
SAVE TIME
SAVE ENERGY

MC16

CLIMATE CARE CERTIFIED

Waterco's MultiCyclone can reduce media filter backwashing by a factor of 4.

MULTICYCLONE 12 & 16

Part Number	Product Description	Nominal Size
200370	MultiCyclone MC16	50mm
200371	MultiCyclone MC12	40mm

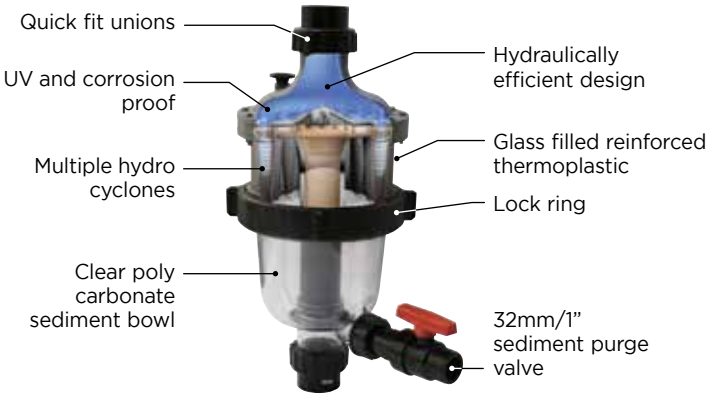

Incoming water enters hydro-cyclones tangentially, generating a strong centrifugal effect. The sediment is spun out to the hydro-cyclone's wall, and then spirals down to the sediment chamber. The filtered water migrates towards the centre of the hydro cyclone where the flow reverses and spirals upwards through the outlet.

Accumulation of sediment can be visibly monitored through the MultiCyclone's clear sediment chamber.

The MultiCyclone is easily cleaned by opening the valve. Only 15 litres of water is discharged to cleanse the MultiCyclone. MultiCyclone is easy to install and fits to most existing filtration systems. There are no moving parts to wear out and replace and it's backed by Waterco's 2 year warranty.

Specifications

Model	Hydrocyclones	Connection Ports	Minimum Flow	Maximum Flow	Maximum Pool Size	Maximum Pressure
MultiCyclone12	12	40mm	2.4m³/hr	18m³/hr	55m³	350 kPa (50psi) 3.5 Bar
MultiCyclone16	16	50mm	3m³/hr	30m³/hr	80m³	350 kPa (50psi) 3.5 Bar

Auto purge kit now available! See following pages

Head Loss for MC16

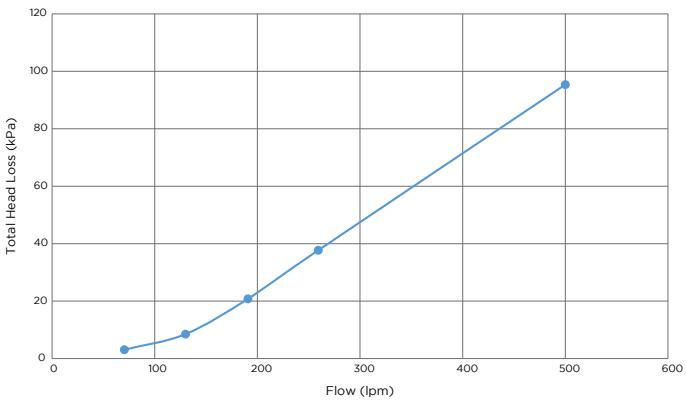

enviropro
SAVE TIME, WATER AND ENERGY

Centrifugal Filtration

- ✓ Minimises filter maintenance and saves water
- ✓ No filter media to clean or replace
- ✓ Suitable for new and existing installations

MultiCyclone 70XL
A commercial Multicylone to cater for higher flow rates up to 90m³/hr.

MultiCyclone PRO
High Pressure (6.9 Bar) version for water treatment applications.

MultiCyclone
Mulit-award winning pre-filtration device that works on the basis of centrifugal water filtration.

enviropro
SAVE TIME, WATER AND ENERGY

SAVE WATER SAVE TIME

WATERCO
water, the liquid of life
www.waterco.com

WATERCO
water, the liquid of life

www.waterco.com

CHEMFLO PRO

Commercial Dosing Systems

CHEMFLO PRO

Commercial Chemical Controller

CHEMFLO PRO

Part Number	Product Description
2595915	FREE/TOTAL/3G 30CL/15ACID
2595916	FREE/TOTAL/3G 15CL/3ACID
2595917	PEROXIDE 15PEROX 3ACID
2595918	FREE 15CL/3ACID
2595919	FREE/TOTAL/PH/3G/30CL/5ACID DIAPRAGM

The Chemflo PRO is a compact electronic communication and control system, designed for use with many different measuring sensors.

Chemflo PRO is a top of the range instrument controller equipped with the capability to connect up to four sensors of any type with appropriate analogue outputs and relays.

Equipped with data logging as standard and multiple PID loops as options, the Chemflo PRO can control complex water treatment processes at a fraction of the cost of other controllers.

Key Features

- **Free chlorine, total chlorine and hydrogen peroxide reading through amperometric sensors. Chlorine range goes from 0.05 to 10.00ppm and hydrogen peroxide from 5 to 500 ppm**
- **Open overflow flow cell for sensors**
- **Superior patented gel-filled glass pH electrode**
- **Large easy to read colour LCD screen**
- **Capabilities for 4 inputs (expandable up to 16) and 4 outputs (expandable up to 16)**
- **Optional Remote communication**
- **Optional VSD pump controller**
- **Includes dosing pumps for sanitiser and pH control**
- **Mounted on backboard**

Installations

Warranty

Controller	24 months
Peristaltic Pumps	12 months
Free, Total Chlorine Sensor	12 months
Hydrogen Peroxide Sensor	12 months
pH Sensor	3 months

CHEMFLO PRO

Commercial Chemical Controller

Chemflo Pro Sizing Guide

	up to 1.5 bar and 50,000L	up to 1.5 bar and 120,000L	up to 1.5 bar and 600,000L	up to 1.5 bar and 1,250,000L	up to 1.5 bar and 2,500,000L	over 1.5 bar and 2,500,000L
CHLORINE FREE	15CH/3ACID	15CH/3ACID	15CH/3ACID	Special order	Special order	Special order
12% Liquid CHL	15CH/3ACID	15CH/3ACID	15CH/3ACID	15CH/3ACID	30CH/15ACID LP	30CH/5ACID HP
1% Liquid CHL	15CH/3ACID	30CH/3ACID	Special order	Special order	Special order	Special order

LP = system pressure under 1.5 bar, inlcudes peristaltic pumps
HP = system pressure 1.5 bar to 4.5 bar inlcude diaphragm pumps

Dimensions Controller:

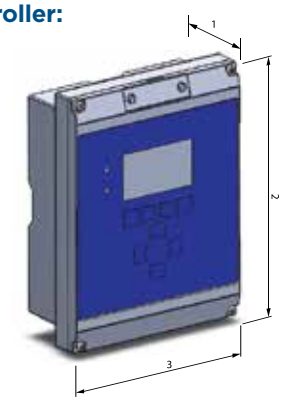

Chemflo Pro Dimensions

1. 103mm
2. 309mm
3. 230mm

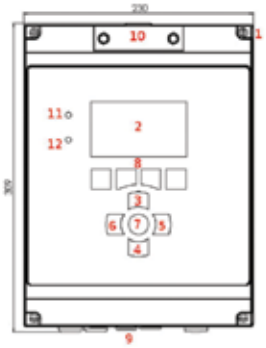

Chemflo Pro Overview

1. Front panel screws (x4)
2. Display
3. Up button
4. Down button
5. Right button
6. Left button
7. Enter/Select button
8. Soft keys
9. Cable glands
10. Micro SD access
11. Power lamp
12. Indication lamp

Technical Specifications (Controller only)

Power Requirement	• 100-240 VAC/0.25 A or 12 VDC/0.8 A
Languages	• Any non-pictogram by request • Any Latin, Cyrillic, Hellenic
Inputs	• Up to 4 configurable sensor inputs (expandable to 16 inputs) • 4 - 20mA, 4 - 20mA loop powered • 0 - 2 VDC • +/ 1200 mV for pH, ORP, PT100, potentiometric, pulse and Modbus • Unused sensor inputs can be used as outputs • Up to 8 digital inputs (expandable to 32)
Outputs	• Up to 4 dedicated configurable analogue outputs (expandable to 16 outputs) • 0 - 20mA, 4 - 20mA • 0 - 1 VDC, 0 - 10 VDC, 1 - 10 VDC • Unused sensor inputs can be used as additional outputs. Up to 8 SPDT electromechanical relays (expandable up to 32 relays) rated 10A at 250 VAC and 5A at 30 VDC
Alarms	• 2 user configurable alarms with dead band and delay for each parameter and control output
Thresholds	• 2 user configurable thresholds (for control) with dead band and delay for each measurement and control output
PID	• Configurable flow proportional PID
Communication (Optional)	• 3G Modem
Memory Backup	• All user configuration is stored in non-volatile onboard flash memory
Enclosure	• ABS flame retardant • IP65 • Nema 4X
Dimensions	• 230mm x 309mm x 103mm (controllers)
Display	• LCD 4.3", 480 x 272 pixels, 24 bit colour
Weight	• 2 kg (Chemflo Pro controller only)
Data Logging	• Downloadable data logs or status message log over 1 million records

Schematic Drawing of Controller Mounted on Backboard (for illustration purposes only)

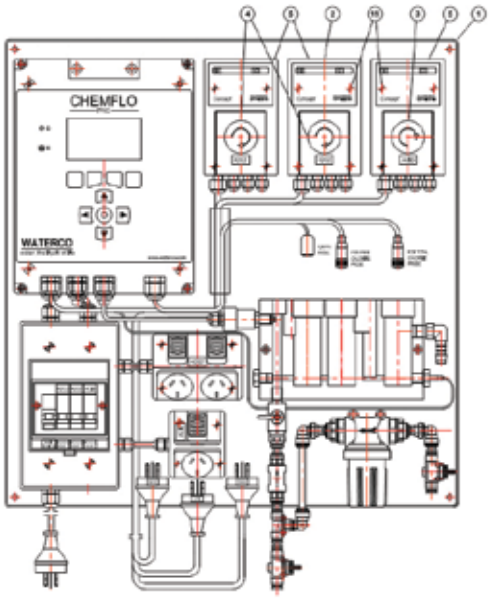

ELECTROCHLOR

Mineral chlorinator

Simplifying Pool Ownership

Waterco's Electrochlor Mineral Chlorinator makes your pool smarter by automatically taking care of sanitisation, filtration and auxiliary equipment so you don't have to!

- Pool temperature display
- Variable speed pump compatibility
- Dual-pump control
- Actuator control
- Dual GPOs for auxiliary equipment
- Water flow detection & pump protection
- Low chlorine mode
- Temperature adjusted salt alarm
- Battery backup
- Comprehensive built-in diagnostics

WATERCO
water, the liquid of life
www.waterco.com

ELECTROCHLOR PRO

Commercial Chemical Controller

ELECTROCHLOR PRO MINERAL CHLORINATOR

Part Number	Product Description	Nominal Size
2515140	Electrochlor Mineral PRO 4000	40g/hr
2515150	Electrochlor Mineral PRO 5000	50g/hr
6450136	Electrochlor Mineral PRO Power Pack	
6449740	Waterco Salt Cell 4000	
6449750	Waterco Salt Cell 5000	

Waterco's Electrochlor Mineral Chlorinator makes your pool smarter by automatically taking care of sanitisation, filtration and auxiliary equipment so you don't have to! This one device will monitor and display everything you need to know about your pool in real time.

- Energy-saving power pack and battery backup
- Self-cleaning electrolytic salt cell
- Low salt alarms and pump protection
- Variable speed pump control
- Dual general power outlets
- Chlorine output of 40 g/hr or 50 g/hr
- Backlit LCD screen with temperature display

Electrochlor Technical Specifications

Model	Chlorine Production (g/hr)	Max Pool Capacity (L) Climate	
		Temperate	Tropical
Electrochlor Mineral 4000	40	120,000	84,000
Electrochlor Mineral 5000	50	140,000	96,000

Parameter/Model	4000	5000
Primary Input (Volts)/Frequency (Hz)	170-264V/47 - 64 Hz	170-264V/47 - 64 Hz
Input Power (W)	206	239
Output Current (A)	8.5	9.1
Maximum Total Current (A)	10	10
Pump Outlet Maximum (A)	8	8
Cell Voltage (V)	21	21
Degree of Protection	IP23	IP23

ELECTROCHLOR MINERAL

Part Number	Product Description	Nominal Size
2515120	Electrochlor Mineral 2000 Chlorinator	20g/hr
2515125	Electrochlor Mineral 2500 Chlorinator	25g/hr
2515130	Electrochlor Mineral 3000 Chlorinator	30g/hr
6450135	Power Pack - Electrochlor	
6449720	Cell plates & housing - 2000	
6449725	Cell plates & housing - 2500	
6449730	Cell plates & housing - 3000	

Technical Specifications

Model	Chlorine Production (g/hr)	Max Pool Capacity (L) Climate	
		Temperate	Tropical
2000	20	60,000	48,000
2500	25	80,000	60,000
3000	30	100,000	72,000

	2000	2500	3000
Primary Input (Volts)/Frequency (Hz)	170-264V/47 - 64 Hz	170-264V/47 - 64 Hz	170-264V/47 - 64 Hz
Input Power (W)	105	115	130
Output Current (A)	5.4 (DC)	5.8 (DC)	6.0 (DC)
Maximum Total Current (A)	10	10	10
Pump Outlet Maximum (A)	8	8	8
Cell Voltage (V)	21	21	21
Degree of Protection	IP23	IP23	IP23

• All units are equipped with a 3 Amp self-resetting fuse.

CHEMFLO PLUS

Commercial Chemical Controller

CHEMFLO PLUS WATER MANAGEMENT SYSTEM

Part Number	Product Description
258100	Chemflo Plus Water Management System
258106	Squeeze Tube Service Kit

CHEMFLO ACCESSORIES

Part Number	Product Description
60125008	15L Black Drum
60137308	60L Blue Drum
60137306	60L White Drum
60137301	60L Black Drum

ORP measurement, no remote communications or data logging.

Recommended for large domestic, or semi commercial applications who do not require data logging

ChemfloPlus continuously analyses your pool water chemistry and accurately sanitises and controls the pool's pH, keeping your pool water safe and healthy.

The ChemfloPlus automatic control system measures and precisely controls set levels of sanitiser (chlorine) and pH balance (acid) through feedback from inline sensors. This ensures the safest possible swimming conditions. Costs are reduced by minimising chemical use and preventing excessive addition of chemicals that may damage the pool and its equipment.

ChemfloPlus With a Pool Heater and Pool Lights

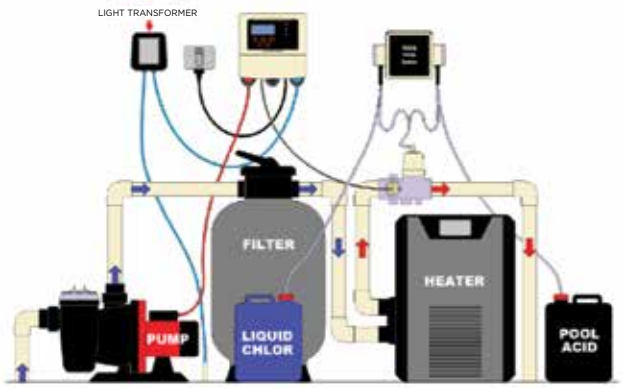

With a Salt Chlorinator

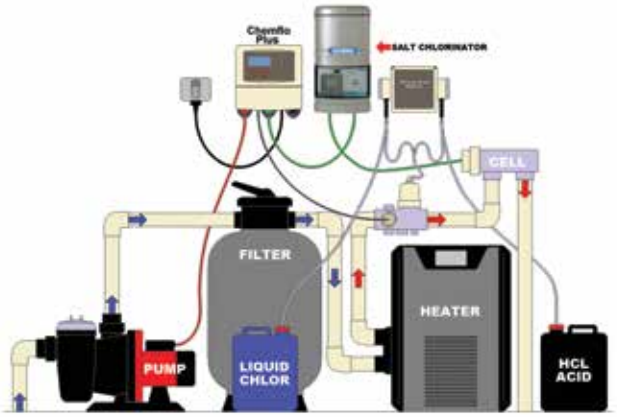

WATERCO

water, the liquid of life

Pump

NEW 4 pole 1450rpm pump out soon. Ask us now!

Hydrostar Plus

Commercial high performance corrosion resistant thermoplastic pumps

WATERCO HYDROSTAR PLUS - Three Phase 380v - 445v

Part Number	Product Description	Q.Max	P.Max
2460750	Hydrostar Plus 5.5kW/7.5HP	122.40m³/hr	6.2kW
2461000	Hydrostar Plus 7.5kW/10HP	152.40m³/hr	8.5kW
2461250	Hydrostar Plus 9.5kW/12.5HP	164.64m³/hr	9.9kW

HYDROSTAR PLUS PUMPS - with Marine Seals (3 year warranty)

Part Number	Product Description	Nominal Size
24607504	Hydrostar PLUS 5.5kW c/w Marine Seal	7.5hp/5.5kw
24610004	Hydrostar PLUS 7.5kW c/w Marine Seal	10.0hp/7.5kw
24612504	Hydrostar PLUS 9.5kW c/w Marine Seal	14.0hp/9.5kw

Purpose built for aquatic facilities, water parks and large commercial swimming pools. Hydrostar Plus pumps are high performance corrosion resistant thermoplastic pumps.

- Heavy duty IP55 weather proofed motor with 431 stainless steel shaft
- 4" JIS discharge flange
- Clear polycarbonate strainer lid enables an instant view of the strainer basket
- 16 litre moulded polypropylene strainer basket
- 6" ANSI flanged suction
- UV stabilised glass filled polypropylene housing
- Drain Plug
- Enclosed glass filled Noryl impeller for long lasting reliability
- Integral support base for ease of mounting
- Lid lock ring with ergonomic handles
- High grade Mechanical Seal - Carbon/ Graphite with 316 stainless steel.

Strainer - Top View

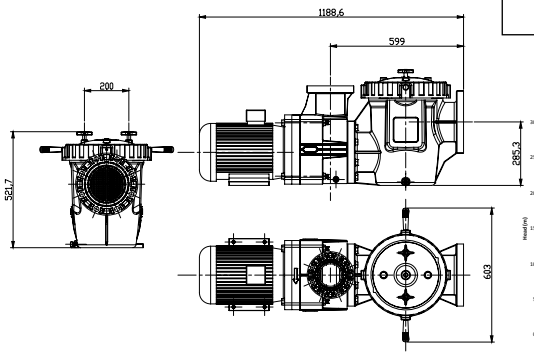

Flow Curve

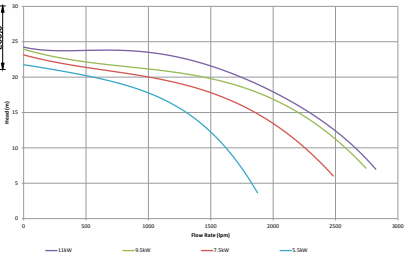

Sound Level

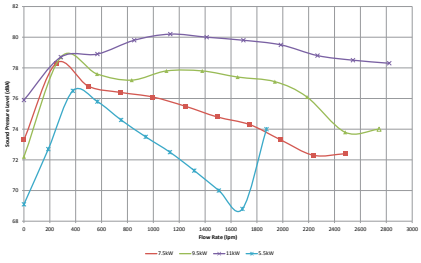

Technical Specifications

Pump Code	Model	Pump Input Power (kW)	Pump Input Power (HP)	Amps	Phase	Volts	Weight (kg)	Total Length	Motor Input Power (kW)	Motor Frame	Pump Rating	Motor RPM
2460750	5.5kW	5.8	7.8	10.4	3	380-415	73	1190	6.2	132	IPX5	2930
2461000	7.5kW	8.3	11.1	14.6	3	380-415	75	1190	8.5	132	IPX5	2940
2461250	9.5kW	9.9	13.3	17.7	3	380-415	91	1218	10.5	132	IPX5	2960
2461500	11kW	11.4	15.3	20.3	3	380-415	92	1218	12.3	132	IPX5	2940

Phase	Volts	Cycle	RPM
3	380 - 415	50	2940

Warranty

Pumps	
Motor and Wet End	2 years

** Please refer to Waterco's warranty terms and conditions*

Material

Motor Bracket	GF Polypropylene	**Diffuser**	GF Polypropylene
Pump Bracket	GF Polypropylene	**Pump Body**	GF Polypropylene
Pump Body O Ring	NBR	**Strainer Basket**	Polypropylene
Seal Assembly	Alumina Ceramic/SS316/Carbon (Silicon Carbide optional)	**Strainer Lid**	Polycarbonate
		Lock Ring	GF Noryl
Impeller	GF Noryl		

NEW Flange kits

HYDROSTAR PLUS FLANGE KITS

Part Number	Product Description
12161002	Hydrostar Plus Flange Kits

Contains 1*6" ANSI suction flange and gasket, 1*4" JIS discharge flange and gasket, SS316 hardware; 90mm suction side bolts/80mm discharge side bolts, washers and nuts.

Hydro 5000 Commercial Strainer

Designed and built for high performance and reliability

The Hydro5000 Commercial strainer is a corrosion resistant thermoplastic strainer designed for aquatic facilities, water parks and large commercial swimming pools. Hydro5000 commercial strainer's main body is constructed from an injection moulded glass reinforced thermoplastic. It's seamless one piece consists of no welds or seams or special tank linings which can corrode or electrolyse.

Hydro5000 strainers weigh less than a 1/3 the weight of its steel counterparts without any compromise in strength and durability.

HYDRO5000 COMMERCIAL STRAINER

Part Number	Product Description	Nominal Size
2409058	Hydro5000 Commercial Strainer Suction 6" ANSI Flange/ Discharge 6" ANSI Flange	6"/6"
2409057	Hydro5000 Commercial Strainer Suction 4" JIS Flange/ Discharge 6" ANSI Flange	4"/6"
2409056	Hydro5000 Commercial Strainer Suction 4" Threaded/ Discharge 6" ANSI Flange	4"/6"
2408055	Hydro5000 Commercial Strainer Suction 6" ANSI Flange/ Discharge 4" JIS Flange	6"/4"
2408054	Hydro5000 Commercial Strainer Suction 4" Threaded/ Discharge 4" JIS Flange	4"/4"

Features

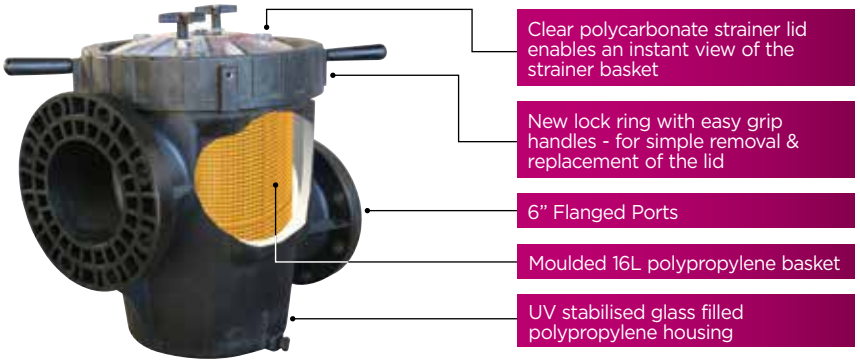

Technical data

Ports	: 4" or 6" flanged ports
Maximum Flow Rate	: 2,550 lpm
Maximum Working Pressure	: 3.5 Bar (50 PSI)
Basket Area	: 0.29m^2
Free Area	: 0.19m^2
Mesh hole height	: 5.5mm
Average mesh hole width	: 5.125mm

Construction Materials

Housing	: Polypropylene (comply with NSF50)
Basket	: Polypropylene (FDA-grade)
Lid	: Polycarbonate

Dimension (mm)

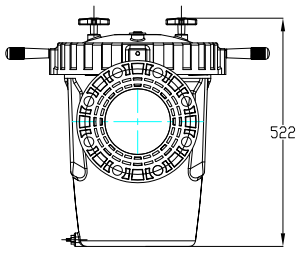

6IN ANSI FLANGE

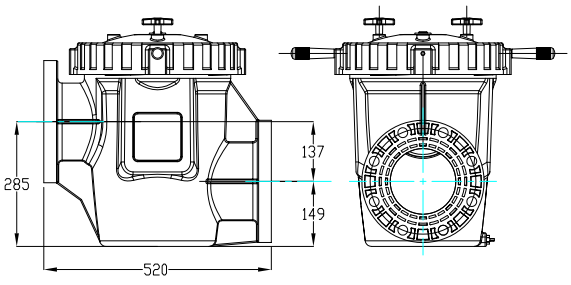

6IN ANSI FLANGE

Hydrostar MKIV

Power pumps

New and improved Hydrostar!

- UV stabilised glass-filled polypropylene housing
- Clear polycarbonate strainer lid for quick inspection
- Lid lock ring with ergonomic handles – simple removal & replacement of the lid without the use of additional tools
- 6 litres moulded polypropylene strainer basket
- Heavy duty IP55 weather proofed motor with 431 stainless steel shaft
- Enclosed glass filled Noryl impeller for long-lasting reliability
- Available in 4.0, 5.7 and 7.2 HP
- 3" half union connections
- Drain plugs

HYDROSTAR MKIV PUMPS - 80mm ports (3 year warranty)

Part Number	Product Description	Nominal Size
2404400310	Hydrostar 400 MKIV - 80mm ports (3 phase)	4.0hp
2404550310	Hydrostar 550 MKIV - 80mm ports (3 phase)	5.5hp
2404700310	Hydrostar 700 MKIV - 80mm ports (3 phase)	7.0hp

The Hydrostar MKIV has been designed to provide a substantially quieter operation with even higher flow rates and higher head than previous Hydrostar models. Waterco has optimised the pump's hydraulic efficiency by **reshaping its internal and external profile.**

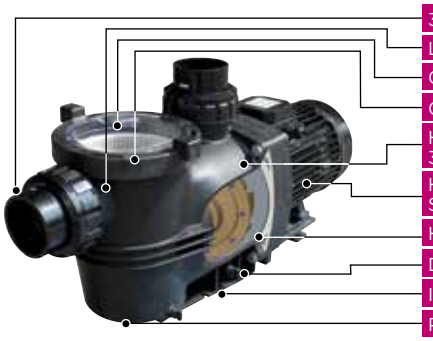

Technical Specifications

Pump Code	Model	Pump Input Power		Amps/ Phase	Weight	Total Length	Motor Frame	Motor input	RPM
		(kW)	(hp)		(kg)	(mm)		(kW)	
2404400333	400 MK4 IE3	3.0	4	5.8	41	846	100	3.4	2890
2404550333	550 MK4 IE3	4.3	5.7	8.1	50	867	112	5.0	2930
2404700333	700 MK4 IE3	5.4	7.2	10.3	54	929	112	6.2	2917

Phase	Volts	Cycle	Motor IP Rating	Pump Rating
3	380 - 415	50	55	X5

Performance Chart

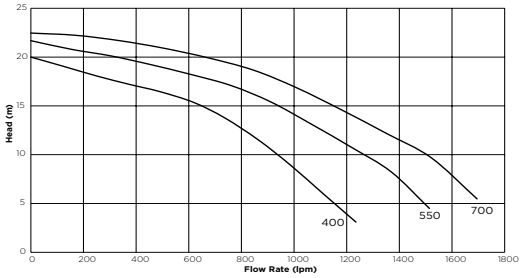

Sound Levels

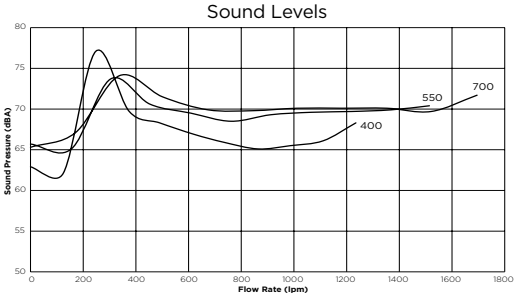

Dimensions

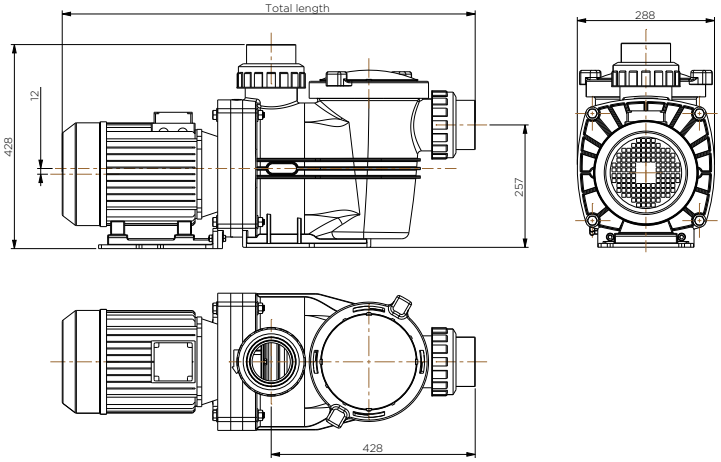

SEA WATER MECHANICAL SEAL

Part Number	Product Description
63401625	Sea water mechanical seal 3/4"

Hydrostar

Power pumps

WATERCO HYDROSTAR PUMPS - High Head

Part Number	Product Description	Q.Max	P.Max
24042003	Hydrostar 200	26.1m³/hr	1.48kW
240430083	Hydrostar 300	36.3m³/hr	2.25kW

Hydrostar MKIII

The pump body is manufactured utilising state of the art engineering plastic moulding with a single piece strainer pot and volute for extra strength.

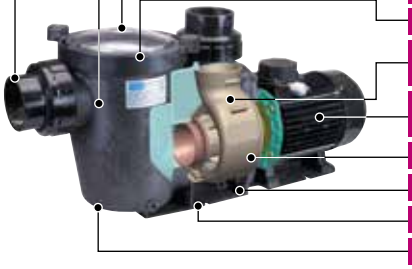

- 3" half union connections.
- Large 6L hair and lint pot.
- Clear pump lid for easy inspection of the strainer basket.
- Quarter turn lid and lock ring with easy grip handles
- High grade Mechanical Seal - Carbon/Graphite with 316 stainless steel.
- Heavy duty IP33 weather proofed motor with 303 stainless steel shaft.
- Hydraulically efficient internal volute.
- Drain plugs.
- Integral support base for ease of mounting.
- Pump Body – UV stabilised glass filled thermoplastic.

The Hydrostar MKIII has been redesigned to provide a substantially quieter operation with even higher flow rates and higher head than the previous Hydrostar models. Waterco has improved the hydraulic efficiency of the pump with the introduction of an internal volute. The volute's hydraulic design provides a natural balanced water flow and reduces hydraulic turbulence.

- **3 phase performance pump**

Performance Chart

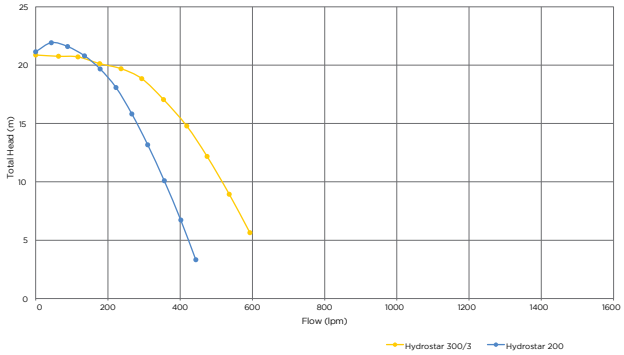

Sound Levels

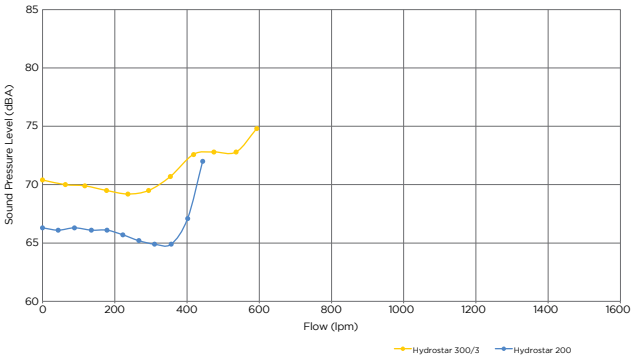

Technical Specifications

Pump Code	Model	Input Power		Amps/ Phase	Weight	Total Length	Motor Frame	Inlet/ Outlet
		(kW)	(HP)		(kg)	(mm)		
24042003	200	1.52	2.0	3.6	25.0	749	80	65mm
240430083	300	2.21	3.0	4.1	29.7	815	90	80mm

Phase	Volts	Cycle	RPM
3	380 - 420	50	2900

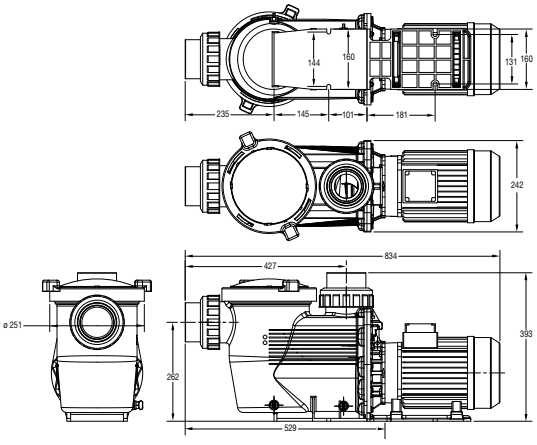

Warranty

Pumps	
Motor and Wet End	2 years

** Please refer to Waterco's warranty terms and conditions*

SEA WATER MECHANICAL SEAL

Part Number	Product Description
63401625	Sea water mechanical seal 3/4"

Hydrostorm ECO-V

Energy Saving Variable 3 Speed Pump

Motor protection bracket. This protection bracket adds a 61mm separation between the pump wet end and motor. The bracket also has larger drain holes for improved draining of any water leaks due to long term usage wear of the main mechanical seal.

HYDROSTORM ECO-V PUMPS

Part Number	Product Description	Nominal Size
24415090	Hydrostorm 150 ECO-V with Comm. Cable	1.50hp
2441509	Hydrostorm 150 ECO-V - 50mm Ports (1 phase)	1.50hp
24410090	Hydrostorm 100 ECO-V with Comm. Cable	1.00hp
2441009	Hydrostorm 100 ECO-V - 50mm ports (1 phase)	1.00hp

CLIMATE CARE CERTIFIED

Key Features

1. Variable 3 speed control panel, IP55 rating
2. Permanent magnet brushless Variable 3 speed D motor
3. UV stabilised & corrosion resistant
4. 50mm quick connect barrel unions for UPV pipe
5. lear basket lid & large 2.1lt strainer basket
6. High grade carbon/graphite mechanical seal with 316 stainless steel spring assembly
7. Strong single piece glass filled thermoplastic pump body
8. Drain plugs
9. Stable support base
10. Hydraulically efficient impeller and diffuser design
11. Fan cooled thermal overload protection

Specifications

Model	Length (mm)	Height (mm)	Width (mm)	Packaged Weight (kg)	Inlet/Outlet (mm)	Strainer Basket (mm)
ECO-V 150	771	340	227	12	50	2.1
ECO-V 100	650	340	227	12	50	2.1

Hydrostorm ECO-V 150 Performance Curves

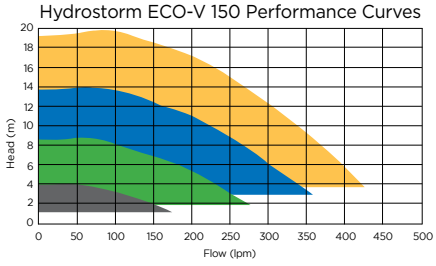

Hydrostorm ECO-V 150 Noise Levels

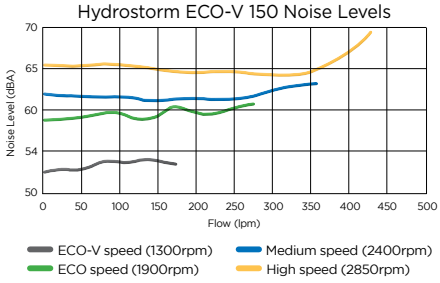

Hydrostorm ECO-V 100 Performance Curves

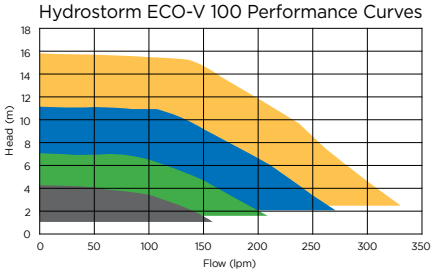

Hydrostorm ECO-V 100 Noise Levels

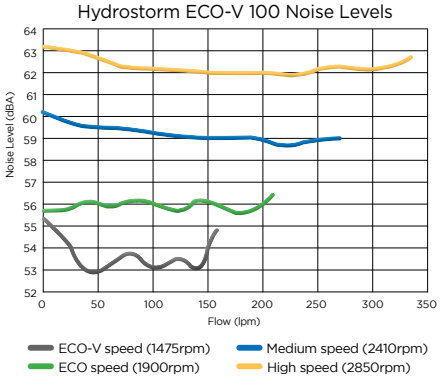

Dimension (mm)

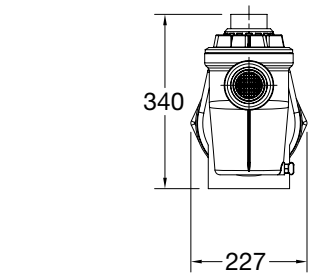

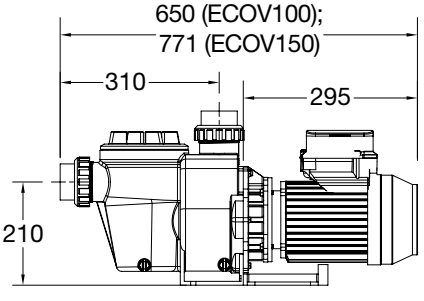

Hydrostorm

Extra power, higher performance

Dimension

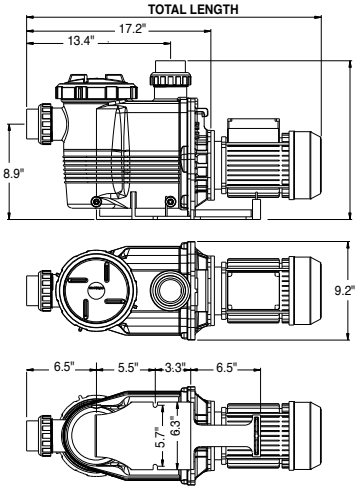

HYDROSTORM PLUS PUMPS - High Head (3 year warranty)

Part Number	Product Description	Nominal Size
2405250	Hydrostorm Plus 250 - 50mm ports (1 phase)	2.50hp
2405300	Hydrostorm Plus 300 - 65mm ports (1 phase)	3.00hp

The Hydrostorm plus has all the proven features of the Hydrostorm with the addition of an innovative lid & lock ring for easier maintenance and a larger strainer basket for increased capacity.

• 2.25 L strainer basket.

Technical Specifications

Model	Flow Rate (lpm)		Nom. HP	kW	Amps	Phase	Total Length (mm)	Motor Frame (mm)	Inlet/Outlet
	8m	10m							
Hydrostorm Plus 250	470	440	2.5	1.88	8.2	1	678	80	65mm ports x / 50mm unions
Hydrostorm Plus 300	540	500	3	2.02	9.3*	1	730	90	65mm ports x / 50mm unions

Please Note: Hydrostorm Plus 3 phase models are available on request. *15 Amp Power Lead Plug.

Phase	Volts	Cycle	RPM
1	220-240	50	2860

Hydrostorm Plus Sound Levels

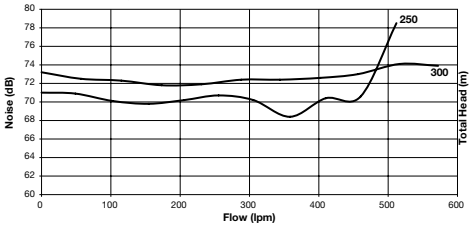

Hydrostorm Plus Flow Curves

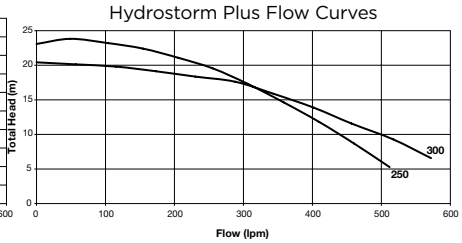

Dimension

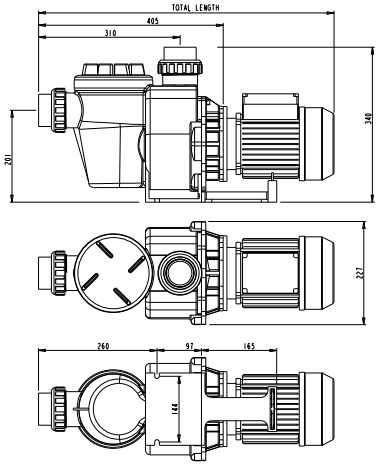

HYDROSTORM PUMPS - High Head - 50mm ports (3 year warranty)

Part Number	Product Description	Nominal Size
244100	Hydrostorm 100 - 50mm ports (1 phase)	1.00hp
244150	Hydrostorm 150 - 50mm ports (1 phase)	1.50hp
244200	Hydrostorm 200 - 50mm ports (1 phase)	2.00hp
Marine Grade Seal versions		
2441004	Hydrostorm 100 - 50mm ports (1 phase) with marine grade seal	1.00hp
2441504	Hydrostorm 150 - 50mm ports (1 phase) with marine grade seal	1.50hp

The Hydrostorm is designed to have all the extra power you need to cope with modern day swimming pool designs.

• 2.1 L strainer basket.

Technical Specifications

Model	Flow Rate (lpm)		Nom. HP	kW	Amps	Phase	Total Length (mm)	Motor Frame (mm)	Inlet/Outlet
	8m	10m							
Hydrostorm 100	250	225	1	0.91	4.00	1	600	71	50mm ports x / 50mm unions
Hydrostorm 150	350	315	1.5	1.31	5.80	1	647	80	50mm ports x / 50mm unions
Hydrostorm 200	370	350	2	1.46	6.60	1	647	80	50mm ports x / 50mm unions

Hydrostorm Sound Levels

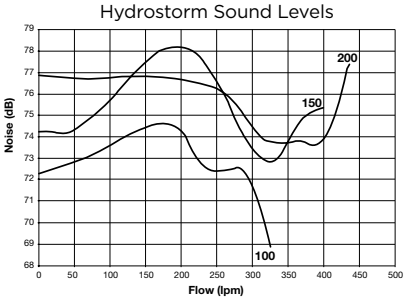

Phase	Volts	Cycle	RPM
1	220-240	50	2860

Hydrostorm Flow Curves

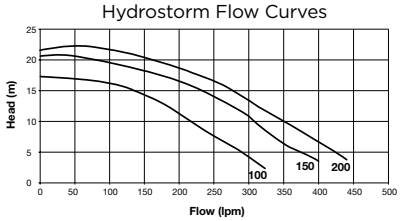

TurboFlo

Multipurpose high performance pumps

TurboFlo is a hydraulically efficient, high performance pump designed for pools and spas with high power requirements. It has an adjustable wet end which can be configured to suit up to 5 different plumbing conditions.

TURBOFLO PUMPS (3 year warranty)

Part Number	Product Description	Nominal Size
2462100	TurboFlo 100 - 50mm ports (1 phase)	1.00hp
2462200	TurboFlo 200 - 50mm ports (1 phase)	2.00hp
2462300	TurboFlo 300 - 50mm ports (1 phase)	3.00hp

TURBOFLO PUMP (Marine Grade Seal)

Part Number	Product Description	Nominal Size
24621004	TurboFlo 100 - 50mm ports (1 phase) with marine grade seal	1.00hp
24622004	TurboFlo 200 - 50mm ports (1 phase) with marine grade seal	2.00hp

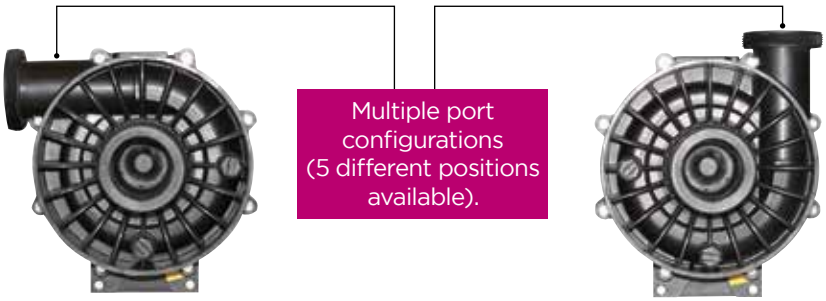

Flow Curve

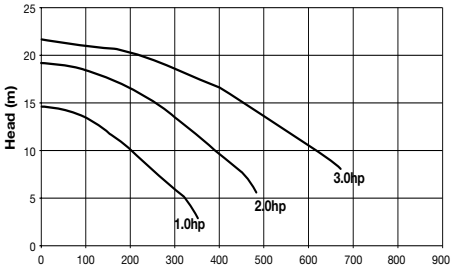

Sound Levels

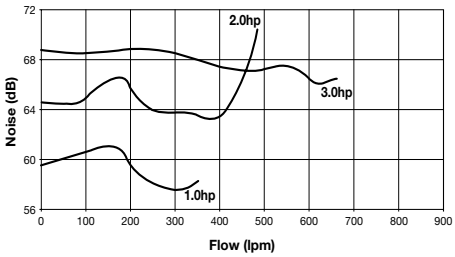

Technical Specifications

Model	Nominal Power (hP)	Motor Input (kW)	Amps	Phase	Total Length (mm)	Motor Frame (mm)	Weight (kg)	Inlet/Outlet
TurboFlo 100	1.00	0.94	4.1	1	445	71	10.4	50mm ports
TurboFlo 200	2.00	1.50	6.4	1	445	80	13.4	50mm ports
TurboFlo 300	3.00	2.10	9.1	1	483	90	16.9	50mm ports

Phase	Volts	Cycle	RPM
1	220-240	50	2860
3	380-420	50	2860

Dimensions

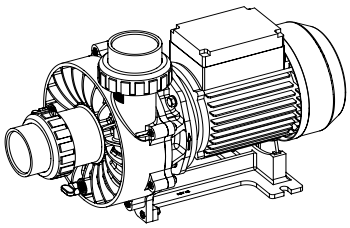

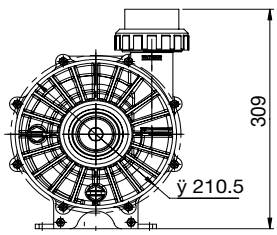

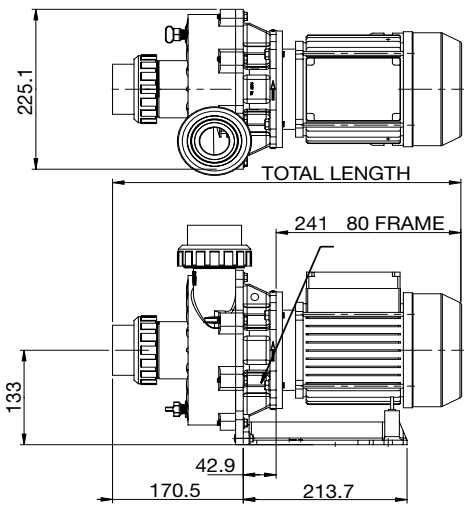

Warranty

Pumps	3 years (conditional)*
Wet End	3 years
Motor, mechanical seal, O'ring, basket & impeller	2 years
Commercial applications	1 year
Labour	1 year

** Please refer to Waterco's warranty terms and conditions*

TurboFlo Aqua

Energy Saving Variable 3 Speed Pump

Turboflo Aqua is a hydraulically efficient, high-performance pump designed for KOI ponds that require a low speed, high powered pump.

Turboflo Aqua pumps are equipped with marine grade seals and manufactured for maximum reliability, efficiency and performance.

It has an adjustable wet end which can be configured to suit up to 5 different plumbing conditions.

Comes with Marine Seal installed

TURBOFLO AQUA - 50mm ports (3 year warranty)

Part Number	Product Description
24620260	Turboflo Aqua 8000 pump
24620261	Turboflo Aqua 10000 pump
24620262	Turboflo Aquatic 12000 pump
24620263	Turboflo Aquatic 16000 pump
24620264	Turboflo Aquatic 21000 pump

Technical Specifications

Model	Maximum Power (hp)	Motor Input (kW)	Amps	Phase	Total Length (mm)	Motor RPM	Weight (kg)
Turboflo Aqua 8000	0.129	0.096	0.42	1	427	1400	10.1
Turboflo Aqua 10000	0.135	0.100	0.44	1	427	1400	10.1
Turboflo Aqua 12000	0.14	0.010	0.46	1	427	1400	10.1
Turboflo Aqua 16000	0.283	0.211	0.96	1	427	1400	10.8
Turboflo Aqua 21000	0.336	0.250	1.13	1	427	1400	10.8

Phase	Volts	Cycle
1	220-240	50

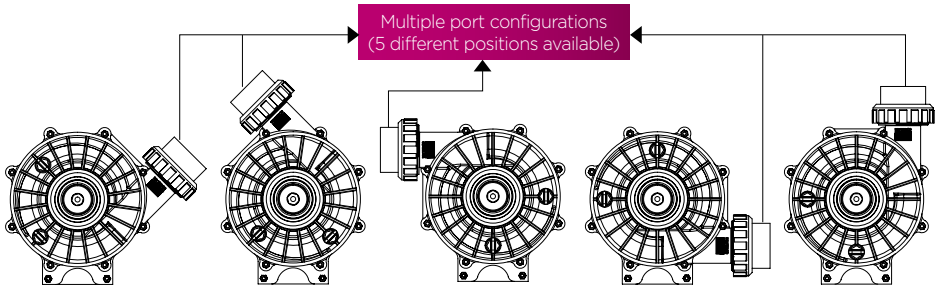

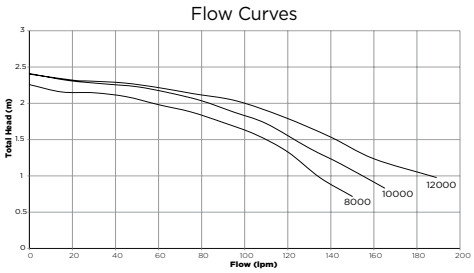

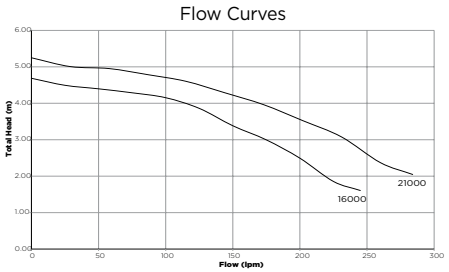

Dimensions

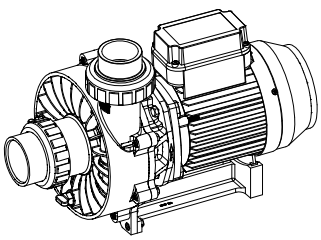

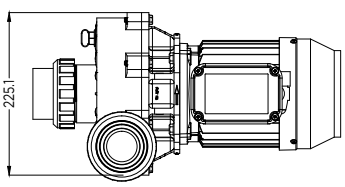

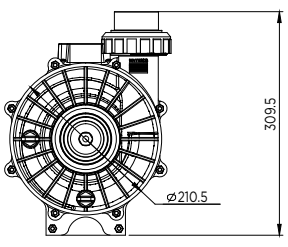

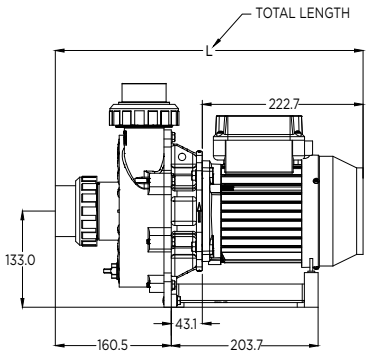

WATERCO

water, the liquid of life

Commercial Aquatics Accessories

Multicyclone Ultra Vac Portable Filtration Cart

- Introducing Waterco's latest product release
- State of the art mobile cleaning trolley featuring the award winning multicyclone technology.
- Call for further details

WATERCO
water, the liquid of life

www.waterco.com

Multicyclone Ultra Vac Portable Filtration Cart

- **Award winning Multicyclone technology.**
- **Integrated pleated filter cartridge.**
- **Extended filter cleaning cycles and increased filter cartridge life span.**
- **Supastream self-priming pump.**
- **Powder-coated structural steel trolley with large wheels for easy maneuverability.**
- **Built in safety protection.**

ULTRAVAC SERVICE TROLLEY W/AU PLUG

Part Number	Product Description	Nominal Size
326401	Ultravac Service Trolley W/AU Plug	100mm

The MultiCyclone Ultra Vac portable filtration cart is a versatile filtration solution for every service need. It gives you the ability to vacuum your swimming pool, water feature, pond or fountain with a portable pump and filter – without losing valuable water.

Product Feature & Benefits:

- Sturdy cart construction: Constructed from strong structural steel tubing and powder coated for protection, capable of lasting many years.
- User-friendly design: Large wheels make it easy to navigate steps and uneven terrain such as gravel and a built-in shelf enables easy access to test kits for service technicians.
- The vacuum hose is easily fitted to the quick connect hose adaptors.
- Protective foot pads: Protective footpads, ensure you don't damage pool surrounds and paving.
- Self-priming pump: Supastream self-priming energy-efficient pump equipped with Waterco's innovative secondary seal for extra motor protection.

- Safety protection: The Ultra Vac comes standard with a 10m power cord while an RCD (residual current device) and isolator provide peace of mind safety protection.
- Pleated filter cartridge; its pleated filter cartridge is constructed from heavy-duty polyester filter fabric with deep pleats for long service life.
- This Portable Filtration Cart features the award-winning MultiCyclone, which removes up to 80 per cent of the incoming dirt load before it reaches the cartridge filter. It means you can vacuum for up to 5 times longer when compared to similar portable Vac systems.
- Simple maintenance: The MultiCyclone is easily cleaned by opening its purge valve. Only 15 litres of water is discharged to cleanse the MultiCyclone.

Dimensions (mm)

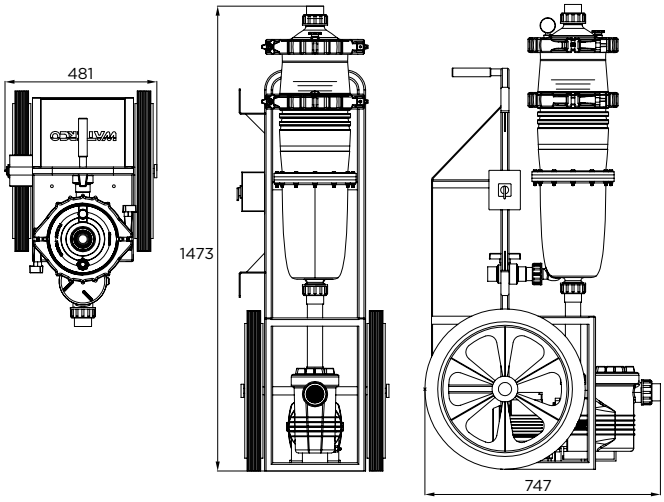

Note: Standard Ultravac comes with a 0.5Hp Supastream pump and Multicyclone Plus MC12 (40 ft2 cartridge). Other combinations available upon request. Vacuum hose is not supplied.

Commercial Aquatics Accessories

For a full range of Waterco's pool accessories, please see our website and current price book

AUTO WATER LEVELLER

Part Number	Product Description
29319	Auto Water Leveller MK2

Waterco's Automatic Water Leveller adds to the leisure time of the pool owner by eliminating the need to keep an eye on the water level.

- Fully automatic operation
- Overflow connection
- Child resistant lock down lid assembly
- Simple servicing and connection

MAIN DRAINS

Part Number	Product Description		Nominal Size
293002	Waterco Main Drain - grey c/w valve and stem	Grey	
29300	Waterco Main Drain - white c/w valve and stem	White	
293000	Waterco Main Drain - white c/w valve and stem [Certified AS1926.3]	White	
29308	Waterco Main Drain - beige - c/w valve and stem	Beige	
29301	Body		
326404	AQUEA MAIN DRAIN COMPLETE - white c/w valve and stem	White	50mm
326405	AQUEA MAIN DRAIN COMPLETE - white c/w valve and stem (Grey Lid)	White/ Grey	
326406	AQUEA PEBBLE M/DRAIN COVER & RING WHITE	White	
326407	Main DRAIN 29300 +AQUEA 326406 COVER & RING		
29302	Hydrostatic Valve		
29304	Main Drain Stem		
293030	Cover & Dress Ring (grey)	Grey	
29303	Cover & Dress Ring (white)	White	
293033	Cover & Dress Ring (MKII)		
29307	Cover & Dress Ring (beige)	Beige	
29313	Grease Plate Hydrovalve		
29314	Lid for grease plate		
291701	Floor Inlet - Adjustable		40mm x 50mm
2917013	Floor Inlet - Repair Kit		
29315	Grease Plate - body only		

Waterco Main Drains are manufactured using the highest quality, impact resistant thermoplastic (ABS plastic). Main Drain incorporates a Hydrostatic valve. This valve will safeguard and stop your pool from lifting out of the ground or "popping" when the water level is low or when there is water under the pool. The long ground water spear detects underground water at a greater depth and causes the hydrostatic valve to release it before it can build up to a level that may damage your pool.

- Available in grey, white and beige.

Floor Inlet

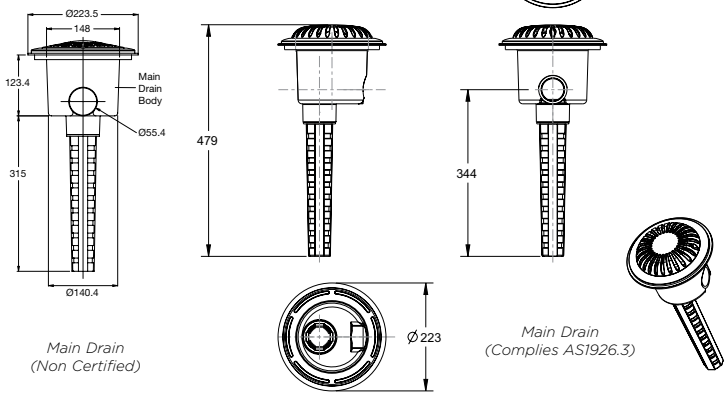

Main Drain (Non Certified)

Main Drain (Complies AS1926.3)

Commercial Aquatics Accessories

For a full range of Waterco's pool accessories, please see our website and current price book

FLUSH DECK GRATING

Part Number	Product Description	Nominal Size
900302W	Flush Deck Grating c/w wave pattern with Waterco logo 41 per metre	301mm wide
900303W	Flush Deck Grating c/w wave pattern with Waterco logo 41 per metre	250mm wide
900304	Flush Deck Grating - Plain without logo 41 per metre	301mm plain
900305	Flush Deck Grating - Plain without logo 41 per metre	250mm plain

- Modular section – easy fitting especially around curves and bends
- Moulded pattern surface – non slip surface
- Flush fitting – no protrusion to pool surround
- Safe even water flow – maximum surface skimming

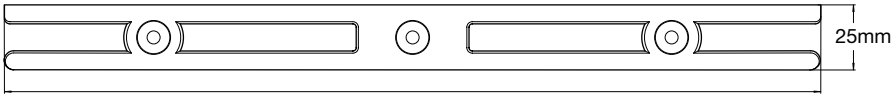

301mm OR 250mm
Curvature: minimum radius 800mm

SUCTIONS

Part Number	Product Description	Carton Qty	Nominal Size
SUCTIONS CONCRETE - Certified to AS1926.3			
4534962	Waterco Slip Fit Clear	45	40mm
4534972	Waterco Slip Fit Clear	45	50mm
4534961	Waterco Slip Fit Grey	45	40mm
4534971	Waterco Slip Fit Grey	45	50mm
453496	Waterco Slip Fit White	45	40mm
453497	Waterco Slip Fit White	45	50mm
453494	Waterco Slip Fit Black	45	40mm
4534970	Waterco Slip Fit Black	45	50mm
SUCTIONS FIBREGLASS - Certified to AS1926.3			
4534982	Waterco Threaded Clear with Nut	30	40mm
4534992	Waterco Threaded Clear with Nut	30	50mm
4534980	Waterco Threaded Black with Nut this is a 40mm Fibreglass pool suction fitting	72	40mm
ASF500	Waterco Threaded Black with Nut 40mm Supa Suction same as ASF480 but black	72	40mm
ASP211	Waterco Threaded Grey with Nut 40mm Glue Fit Spa Suction same as ASF523 but Grey	60	40mm
4534980	Waterco Threaded Black with Nut	30	40mm
4534990	Waterco Threaded Black with Nut	30	50mm
4534981	Waterco Threaded Grey with Nut	30	40mm
4534991	Waterco Threaded Grey with Nut	30	50mm
453498	Waterco Threaded White with Nut	30	40mm
453499	Waterco Threaded White with Nut	30	50mm

- Available as 40 or 50mm pipe, slip fit for concrete and threaded for fibreglass pool applications.
- Low profile for minimal intrusion into the pool
- Suction area of 7500mm^2
- Available in clear, black, white and grey
- Also available in white with 50mm threaded tail
- Testing accordance with AS1926.3 2010

Waterco Slip Fit Clear

Waterco Threaded Clear with Nut

Slip Fit
For Concrete Pools

Multi Directional Eyeball
(Clear) Slipfit for concrete

EYEBALL FITTINGS – CONCRETE POOLS

Part Number	Product Description	Carton Qty	Nominal Size
EYEBALLS - Concrete			
29103	Multi Directional Eyeball (Clear) Slipfit for concrete		CL9/40mm
29153	Multi Directional Eyeball (Clear)		CL9/50mm
29108	Multi Directional Eyeball (Grey)		CL9/40mm
291500	Multi Directional Eyeball (Grey)	150	CL9/50mm
29101	Multi Directional Eyeball (white) (Slipfit for Concrete Pools)	400	CL9/40mm
29102	Multi Directional Eyeball (brown) (Slipfit for Concrete Pools)		CL9/40mm
29104	Multi Directional Eyeball (black) (Slipfit for Concrete Pools)		CL9/40mm
29150	Eyeball White 50mm Slip Fit		50mm

- Slip fit tail has crosshair slots for easy access into 40mm pipe
- Adjustable eyeball to assist directional flow of water
- Flush fitting wall collar
- Max flow rate: 245lpm
- Available in clear, black, grey, white and brown
- Also available in white with 50mm slip fit tail

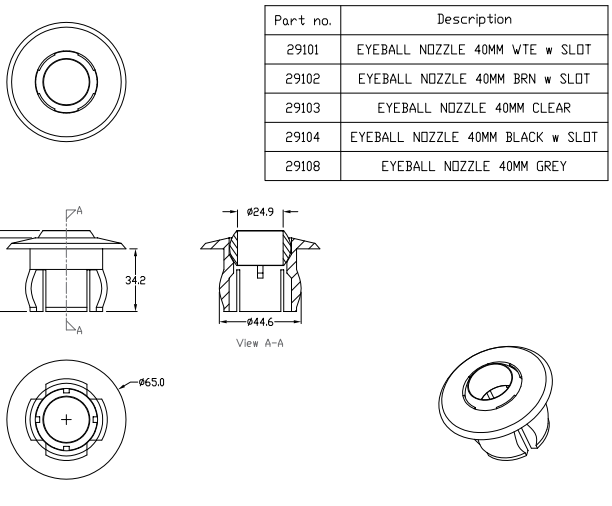

Part no.	Description
29101	EYEBALL NOZZLE 40MM WTE w SLOT
29102	EYEBALL NOZZLE 40MM BRN w SLOT
29103	EYEBALL NOZZLE 40MM CLEAR
29104	EYEBALL NOZZLE 40MM BLACK w SLOT
29108	EYEBALL NOZZLE 40MM GREY

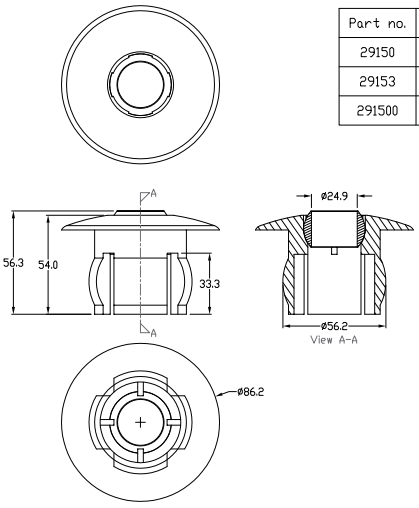

Part no.	Description
29150	EYEBALL WHITE 50MM SLIP FIT
29153	EYEBALL NOZZLE 50MM CLEAR
291500	EYEBALL 50MM SLIP FIT GREY

WATERCO

water, the liquid of life

Heaters

ElectroHeat PRO

ELECTROHEAT PRO

Part Number	Product Description	Nominal Size
27883803	Electroheat Pro 100 (3 Phase)	100 kW

Electroheat Pro Commercial heat pump

The largest of the Electroheat range our 100kW commercial unit has been designed to offer maximum output and reliability in a commercial setting.

The heat pump cabinet is constructed using high gauge powder coated metal sheet ensuring a high quality finish and sturdy con-struction. The ultra rigid metal base incorporates forklift access thus reducing the risk of damage during transport and allowing for ease of installation once on site.

Double Coil Titanium Heat Exchanger

With much greater surface area and longer contact time, this Waterco innovation allows higher heat transfer, thus delivering some of the highest efficiencies in its class.

A Titanium Heat Exchanger offers total protection against erosion and corrosion. Titanium metal's corrosion resistance is due to a stable, protective, strongly adherent oxide film. This film forms instantly when a fresh surface is exposed to air or moisture.

Titanium is resistant to: chlorinated water, ozone, iodine, Baquacil, bromine and salt water.

The new generation Electroheat PRO heat pump is the latest advancement in commercial size swimming pool heating. The PRO 100 has been designed to deliver efficient cost effective large pool heating in an easy to operate and install package.

- **Electronically controlled temperature management**
- **Fault diagnostic system and inbuilt protection devices**
- **Hermetic scroll compressors**
- **Titanium heat exchangers**
- **R410A Refrigerant**
- **Bluefin treated evaporators**

Two ½HP fan motors power the two 4-blade 26" fans that provide high volume air flow to the twin evaporators.

The Electroheat Pro boasts innovative design solutions, such as the dual 11HP Sanyo Scroll compressors (380-415V/50Hz/3ph), and the control panel which monitors the functioning of both compressors individually, as well as monitoring the 3 phases.

Specifications

Model Number	PRO100
Nominal Heating Capacity*	97kW (331,000 BTU)
Test Lab (26/26/80)	97kW (331,000 BTU)
Test Lab (15/26/70)	67kW (229,000 BTU)
Test Lab (10/26/63)	58kW (198,000 BTU)
Compressor (HP)	(2 x) 11hp
Manufacturer	Sanyo
Compressor number	C-SCP360H38A
Water Flow & Plumbing	
Water Bypass Type	Ext. Field Install
Min./Max. Water Flow Rate (LPM)	500-680
Min./Max. Water Inlet Temperature (°C)	14° - 40°
Plumbing Connection Size (Slip)	80mm/3" PVC
Electrical Specifications	
50Hz Dual Rated Supply Voltage (VAC)	380-415V
Supply Voltage Phase	3
Unit run current (AMP)	29.5
Power consumption (kW)	16.12
Coefficient of Performance @ 26/26/80 (COP)*	6.4
Min./Max. Air Inlet Temperature (°C)	6°/40°
Refrigerant Characteristics	
Refrigerant Type	R-410A
Physical Characteristics	
Cabinet Construction	Powder coat sheet metal
Colour	Black
Weight (kg)	453
Dimensions (mm)	1730W-1090L-1120H
Noise Emission Characteristics	
Noise Emission (dBA)	69 @ 1metre & 59 @ 3 metres

* (26/26/60) = Air Temp: 26° / Water Temp 26° / Humidity 60%

Dimensions

Model	A	B	C
Electroheat Pro	1730 mm	1090 mm	1120 mm

Clearance

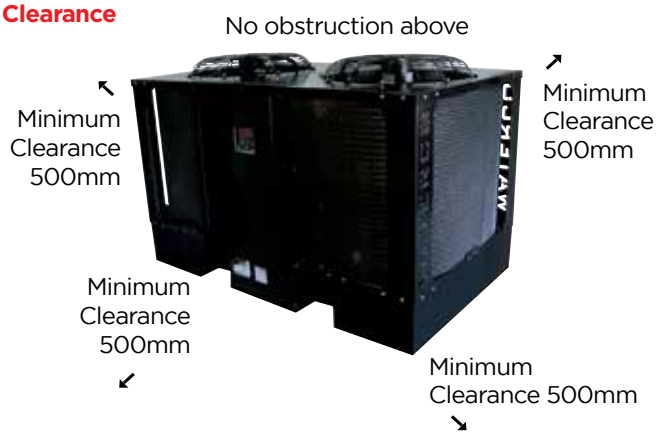

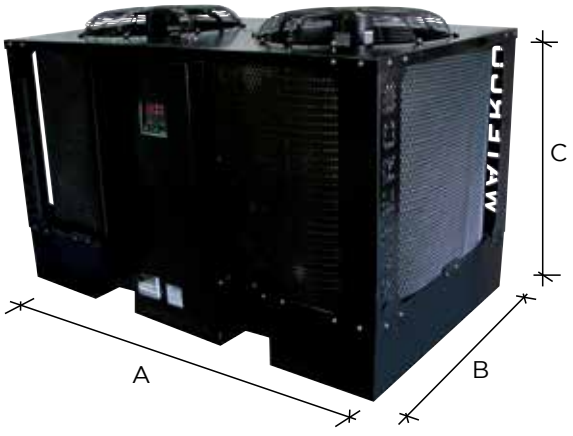

Electr Heat ULTRA

ELECTROHEAT ULTRA HEAT PUMPS - R410 c/w hot gas de-icing for cold climates

Part Number	Product Description		Nominal Size
2782312	Electroheat Ultra 23 - side vent		23 kW
278100313	Electroheat Ultra 29 (3 Phase) - top vent	to be discontinued	29 kW
278150313	Electroheat Ultra 44 (3 Phase)		44 kW

Generally swimming pool heat pump evaporators ice once ambient temperatures drop below 10° , which negatively impacts on its heating performance. When ice forms on the Electroheat Ultra's evaporator, its refrigeration pipe is automatically reconfigured to allow hot gas to melt the ice off its evaporator; the Electroheat Ultra then reverts back to heating your pool with maximum efficiency.

Electroheat Ultra heat pumps will heat your pool even when the ambient air temperature is near freezing point (0°C).

- **Energy efficient heating**
- **Temperature management & self-diagnosis**
- **Automatic hot gas de-icing for cold climates**
- **High density titanium heat exchanger**
- **Weather proof cabine**

Performance Specifications			
Nominal Power Output (kW)*	23	29	44
Nominal Heating Capacity BTU*	78500	105,000	150,000
Power Output (kW): Air 26C / Water 26C / RH63%	21.8	28.4	43.7
COP	6.2	5.2	5.7
Power Output (kW): Air 15 C / Water 24 C / RH70%	20	28.0	42.0
COP	5.7	5.0	5.0
Supply Voltage (VAC)	240	415	
Supply Voltage Phase	1	3	
Power Consumption (kW/h)	3.5	5.6	7.7
Full Load Amps (AMP)	30	14	17
Minimum Breaker or Fuse (AMP)	40	25	32
Min./Max. Ambient Air Temperature (C)	1 / 40		
Min./Max. water inlet temp (C)	10 / 40		
Water Connections (mm)	40mm slip		
Water Bypass Type	External Field Install		
Min./Max. Water Flow Rate LPM	120 - 230	130 - 300	
Weight (kg)	78	87	93
Dimensions W x L x H (mm)	1269 x 361 x 717	890 x 880 x 1130	
Refrigerant	R410A		
Fast Evaporator De-icing	Yes		

Double Coil Titanium Heat Exchanger

With much greater surface area and longer contact time, this Waterco innovation allows higher heat transfer, thus delivering some of the highest efficiencies in its class.

A Titanium Heat Exchanger offers total protection against erosion and corrosion. Titanium metal's corrosion resistance is due to a stable, protective, strongly adherent oxide film. This film forms instantly when a fresh surface is exposed to air or moisture.

Titanium is resistant to: chlorinated water, ozone, iodine, Baquacil, bromine and salt water.

enviropro
SAVE TIME, WATER AND ENERGY

ElectroHeat MKIII

ELECTROHEAT PLUS MKIII HEAT PUMPS - R410

Part Number	Product Description		Nominal Size
2782533	Electroheat Plus 25MKIII (3 Phase)		25kW
2783133	Electroheat Plus 31MKIII (3 Phase)		31kW
2783733	Electroheat Plus 37MKIII (3 Phase)	to be discontinued	37kW
2784433	Electroheat Plus 44MKIII (3 Phase)		44kW

WATERCO HEAT PUMPS - All ElectroHeat Plus MKIII and ElectroHeat MKIII heat pumps come complete with a commercial grade Titanium heat exchanger and digital display as standard. All 3 phase heat pumps are supplied with a 3 phase indicator and protector.

Featuring an extra large evaporator area for maximum ambient heat extraction and vertical ventilation the Electroheat Plus is ideal for heating:

- **Swimming pools for year round enjoyment**
- **Swimming pools to extend the season**
- **Swimming pools where roof space for solar is limited**
- **Available in 25, 31, 37 & 44kW heating capacities**

Double Coil Titanium Heat Exchanger
With much greater surface area and longer contact time, this Waterco innovation allows higher heat transfer, thus delivering some of the highest efficiencies in its class.

A Titanium Heat Exchanger offers total protection against erosion and corrosion. Titanium metal's corrosion resistance is due to a stable, protective, strongly adherent oxide film. This film forms instantly when a fresh surface is exposed to air or moisture.

Titanium is resistant to: chlorinated water, ozone, iodine, Baquacil, bromine and salt water.

Performance Specifications				
	Electroheat Plus			
Nominal Power Output (kW)*	25	31	37	44
Nominal Heating Capacity BTU*	85,000	105,000	125,000	150,000
Power Output (kW): Air 26C / Water 26C / RH63%	24.5	30.6	36.2	43.7
COP	4.9	5.5	5.4	5.7
Power Output (kW): Air 15C / Water 24C / RH70%	22.5	28.5	35.0	42.0
COP	4.5	5.2	5.2	5.4
Supply Voltage (VAC)	380 - 415			
Supply Voltage Phase	Three Phase			
Power Consumption (kW/h)	5.0	5.6	6.7	7.7
Full Load Amps (AMP)	12	14	15	17
Minimum Breaker or Fuse (AMP)	20	25	25	32
Electrical Connection	Terminals			
Min./Max. Ambient Air Temperature (C)	10 / 40			
Min./Max. water inlet temp (C)	18 / 40			
Water Connections (mm)	40mm slip			
Water Bypass Type	External Field			
Min./Max. Water Flow Rate LPM	120 - 230	130 - 300		
Weight (kg)	84	87	89	93
Dimensions W x L x H (mm)	750 x 850 x 1000	890 x 880 x 1130		
Refrigerant	R410A			

Dimensions

Model	A	B	C
ElectroHeat Plus MK III 25	780 mm	890 mm	870 mm
ElectroHeat Plus MK III 31kW, 37kW, 44kW	890 mm	880 mm	1120 mm

Clearance

Electr Heat ECO-V

12KW model

17, 21 & 25kW models

Electroheat ECO-V Inverter technology heat pumps can heat your pool in colder climates even when the ambient air temperature is close to 0°C and are ideal for heating:

Available in: 12kW heat only

17, 21, 25kW heat and cool models

ELECTROHEAT ECO V INVERTER POOL HEAT PUMPS - SIDE VENT

Part Number	Product Description		Nominal Size
2780510	Electroheat ECO-V Inverter 5KW heat/cool 10amp plug	available Dec 20	5kw
2780910	Electroheat ECO-V Inverter 9KW heat/cool 10amp plug		9kw
2781211	Electroheat ECO-V Inverter 12KW heat/cool 15amp plug		12kw
2781711	Electroheat ECO-V Inverter 17KW heat/cool		17kw

ELECTROHEAT ECO V INVERTER POOL HEAT PUMPS

Part Number	Product Description	Nominal Size
2781210	Electroheat ECO-V Inverter 12KW 15amp Plug heat only	12KW
2781710	Electroheat ECO-V Inverter 17KW heat/cool	17KW
2782110	Electroheat ECO-V Inverter 21KW heat/cool	21KW
2782510	Electroheat ECO-V Inverter 25KW heat/cool	25KW

Energy Efficient Inverter Technology

Electroheat ECO V inverter pool heat pumps utilise a variable speed compressor to regulate the pool water temperature automatically and independently.

- Inverter technology uses a variable speed compressor motor similar to a car's engine.
- It slows down and speeds up as needed to hold a selected set temperature
- The desired set temperature will be reached more quickly and maintained more efficiently.
- Inverter technology provides a more precise water temperature without the fluctuations and power wastage of fixed speed systems.
- Inverter technology is significantly more energy efficient with energy savings of up to 30% over fixed speed systems.
- The speed control of the compressor and fan motor also means quieter operation.

Performance Specifications				
Nominal Power Output (kW)*	**12**	**17**	**21**	**25**
Power Output: Air 27 C / Water 26 C / RH 80%	11.2-6.5	21.0-5.46	24.0-6.24	26.6-6.9
Power Output: Air 15 C / Water 26 C / RH 70%	6.0-3.0	17.2-4.6	21.0-5.1	24.1-6.1
Electrical Input (kW)	2.54-0.84	4.05-0.62	5.0-0.69	5.95-0.85
Normal Current (Amp)	11.0-3.6	17.6-2.7	21.7-3.0	27.2-3.95
COP	4.4-7.8	4.25-7.45	4.20-7.4	4.05-7.2
Supply Voltage (VAC)	230 ~ 240			
Supply Voltage Phase	Single Phase			
Breaker or Fuse (AMP)	16	20	25	32
Min. / Max. Ambient Air Temperature (C)	> 0 / 40	-5 / 43		
Min. / Max. water inlet temp (C)	10 / 40	1 / 40		
Water Connections (mm)	40mm slip			
Water Bypass Type	External Field Install 3 X 2 way			
Heat Exchanger Max. pressure	3.5 bar / 350kPa			
Min. / Max. Water Flow Rate LPM	115 - 160	110 - 160	135 - 185	145 - 195
Weight (kg)	43	118	120	122
Dimensions W x L x H (mm)	636 x 714 x 973	810 x 880 x 1075		
Refrigerant	R410A			
Fast Evaporator De-icing	Yes			
Mode	Heat Only	Heat / Cool / Auto		

Related products:
Electroheat MKV range - Pool heat pumps
Electroheat Ultra range - Pool heat pumps with hot gas de-icing for cold climates.
Electroheat Pro range - Pool heat pumps for commercial applications.

Electr Heat MKV

Smart controls - for temperature management and self diagnosis

Dual coil titanium heat exchanger - Maximising water contact for efficient heat transfer

Unique modern robust design – noise & vibration reduction

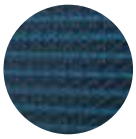

Hydrophilic Blue fin evaporator technology – improved corrosion resistance

Improved condensate collection – two fitted spigots to allow drainage hose connection

www.waterco.com

enviropro
SAVE TIME, WATER AND ENERGY

SAVE ENERGY SAVE MONEY

WATERCO
water, the liquid of life

Electr Heat MKV

Energy efficient swimming pool heating

ELECTROHEAT MKV HEAT PUMPS - R410

Part Number	Product Description	Nominal Size
278095	Electroheat MK V 9kW 240V 10A plug	9kW
278123	Electroheat MK V 12kW 240V 15A plug	12kW
278152	Electroheat MK V 15kW 240V 50HZ	15kW
278192	Electroheat MK V 19kW 240V 50HZ	19kW
278232	Electroheat MK V 23KW 240V 50HZ	23kW

Electroheat MKV pool heat pumps feature compact design and horizontal venting and are ideal for heating:

- **Available in 9, 12, 15, 19 & 23kW heating capacities**

Greater interest in environmentally friendly and cost effective pool heating has seen an increase in the use of heat pumps around Australia to heat pools. To meet the demand, Waterco has added to its heat pump range the Electroheat MKV with heat output capacities 9, 12, 15, 19 and 23kW which are ideal for heating plunge pools, swim spas, spas and swimming pools as a solar replacement/ season extender.

Performance Specifications					
	Electroheat MKV				
Nominal Power Output (kW)*	9	12	15	19	23
Nominal Heating Capacity BTU*	30700	41000	51000	64000	78,500
Product Code	**278095**	**278123**	**278152**	**278192**	**278232**
Power Output (kW): Air 26C / Water 26C / RH63%	8.9	11.7	13.5	18.5	21.8
COP	5.9	6.1	6.1	6.3	6.2
Power Output (kW): Air 15C / Water 24C / RH 70%	6.8	9.2	9.4	17.0	20.0
COP	4.8	4.8	4.3	5.8	5.7
Supply Voltage (VAC)	240	240	240	240	240
Supply Voltage Phase	Single Phase				
Power Consumption (kW/h)	1.5	1.9	2.2	2.9	3.5
Full Load Amps	9	12	12	22	30
Minimum Breaker or Fuse (AMP)	16	20	20	30	40
Electrical Connection	10A plug	15A plug	Terminals		
Min. / Max. Ambient Air Temperature (C)	10 / 40				
Min. / Max. water inlet temp (C)	18 / 40				
Water Connections (mm)	40mm				
Bypass	External 3 x 2 way				
Min. / Max. Water Flow Rate LPM	120 - 230				
Unit Dry Weight (kg)	51	55		79	
Dimensions W x L x H (mm)	1269 x 361 x 717				
Refrigerant	R410A				
Heat Exchanger Max. pressure	3.5 bar / 350 kPa				

Related products:
Electroheat Ultra range - Pool heat pumps with hot gas de-icing for cold climates.
Electroheat Pro range - Pool heat pumps for commercial applications.
Electroheat ECO V range - Pool Heat pumps with inverter technology.

Sizing Chart to Heat Your Pool to 28°C					
		Temperate Location *		Warm Location **	
		Up to 10 hrs / Day Run time		Up to 10 hrs / Day Run time	
Pool Size (m)	Litres	with Pool Cover	No Pool Cover	with Pool Cover	No Pool Cover
3 x 6	Up to 23000	9kW	15kW	9kW	9kW
3 x 7	Up to 27000	9kW	15kW	9kW	9kW
4 x 7	Up to 35000	12kW	23KW	9kW	15kW
4.5 x 8.5	Up to 50000	15kW	31kW	9kW	19kW
5 x 10	Up to 65000	19kW	23kW x 2	12kW	23kW
5.5 x 11	Up to 80000	23kW	23kW x 2	15kW	15kW x 2
6 x 12	Up to 100000	15kW x 2	23kW x 3	19kW	19kW x 2

Note: Size and performance are influenced by ambient temperature, humidity, use of a pool cover, night time temperature, pool location, wind factor, water features and if the unit is switched off over night. The recommended sizing in the table above is based on operating the unit up to 10 daytime hours with the pool subjected to normal suburban wind. No allowance has been made for the cooling effects of water features, negative edges or high wind areas. Therefore, any under sizing of the heater for your pool heating requirements is not the responsibility of Waterco.
*Temperate Location (Sydney) :- Where minimum average daytime temperatures between September to April are not less than 18°C.
**Warm Location (Brisbane) :- Where minimum average daytime temperatures between September to April are not less than 24°C

ELECTROHEAT BYPASS KIT

Part Number	Product Description
69051363	Electroheat bypass plumbing kit 460mm
69051364	Electroheat bypass plumbing kit 283mm
69051365	Electroheat bypass plumbing kit 360mm

Waterco has introduced a new preassembled Heat Pump Bypass kit to make installation and operation easier for our customers and consumers. The bypass is compatible on all Electroheat heat pumps with 360mm, 460mm & 283mm centred water connections.

Waterco Product Code	Product Description	BYPASS Product Code	Outlet Centres
278095	Electroheat MKV 9kW	69051364	290mm
278123	Electroheat MKV 12kW	69051364	290mm
278152	Electroheat MKV 15kW	69051364	290mm
278192	Electroheat MKV 19kW	69051363	460mm
278232	Electroheat MKV 23kW	69051363	460mm
2782533	Electroheat Plus 25kW	69051363	460mm
2783133	Electroheat Plus 31kW	69051363	460mm
2783733	Electroheat Plus 37kW	69051363	460mm
2784433	Electroheat Plus 44kW	69051363	460mm
2782311	Electroheat Ultra 23kW	69051363	460mm
278100313	Electroheat Ultra 29kW	69051363	460mm
278150313	Electroheat Ultra 44kW	69051363	460mm
2781210	Electroheat ECO-V 12kW	69051364	290mm
2781710	Electroheat ECO-V 17kW	69051365	360mm
2782110	Electroheat ECO-V 21kW	69051365	360mm
2782510	Electroheat ECO-V 25kW	69051365	360mm

Turbotemp™
POOL AND SPA HEATING

Ultra-high Performance in a compact quiet and ECO-friendly design.

The Turbotemp heater's easy-to-read controls make system operation and monitoring simple. Pool and spa temperatures can be pre-set and controlled with the push of a button. A digital display indicates the water temperature, and five LED lights give you system status and let you know if the heater needs service.

TURBOTEMP

Part Number	Product Description	Nominal Size
2701251	125 Natural Gas	125MJ
2701252	125 LPG - Propane	125MJ
270201	200 Natural Gas	200MJ
270202	200 LPG - Propane	200MJ
270301	300 Natural Gas	300MJ
270302	300 LPG - Propane	300MJ
270401	400 Natural Gas	400MJ
270402	400 LPG - Propane	400MJ
6844340	150mm Flexible Flue Kit - 125, 200, 300	
6844350	200mm Flexible Flue Kit - 400	
684431106	Metal Flue Collar 150mm	
684431108	Metal Flue Collar 200mm	
684738	Pressure relief valve	

No matter what you're seeking in your swimming pool heater, the Turbotemp heater measures up. Compare this list of features to any other and you'll see why Turbotemp heaters are setting a new standard for total value.

- Very compact design.
- A fully pre-mixed burner system with a highly efficient air and gas mixture.
- Hot surface ignition eliminating the requirement for a pilot.
- Push button digital controls with easy to view rotating display.
- Engineered for super quiet operation.
- Certified for low NOx emissions.
- Safe operation through a series of features including:-
  - o Water pressure switch
  - o Over temperature switch
  - o Stack flue sensor
  - o Manual gas shut-off for servicing

Pool Sizing*

°C Temperature Change/ 24 Hrs.	Heater Size			Heater Size		
	Model 200	Model 300	Model 400	Model 200	Model 300	Model 400
	Pool Capacity in Litres			Pool Surface Area in Sq. Mt. at 1.65m Depth		
2.77	368,635	552,954	737,269	220	329	439
5.44	184,315	276,475	368,635	110	165	220
8.31	122,878	184,319	245,756	73	110	146
11.08	92,160	138,239	184,315	55	82	110
13.85	73,728	110,595	147,453	44	66	88
16.62	61,437	92,156	122,878	37	55	73
19.39	52,663	78,994	105,325	31	47	63
22.16	46,080	69,122	92,160	27	41	55

Spa Sizing*

Model	Spa Volume (Litres)								
	750	1,150	1,500	1,900	2,250	2,650	3,000	3,400	3,800
	Minutes for 16.2°C (30°F) Temperature Rise (Heater Input in 1000 BTU/HR)								
125	31.5	47.3	61.3	77.0	92.8	108.5	124.3	140.0	155.8
200	18.0	27.0	35.0	44.0	53.0	62.0	71.0	80.0	89.0
300	13.5	20.0	26.5	33.0	40.0	46.5	53.0	60.0	66.5
400	9.0	13.0	18.0	22.0	27.0	31.0	35.0	40.0	44.0

Raypak Range

SPA HEATER MODEL SPARTAN

The Spartan 131 spa heater is a purpose built spa heater. It is capable of heating almost any spa on demand.

The Spartan provides an extensive list of standard features including:

- Digital display
- Energy saving “hot surface ignition”
- Easy integration with other pool & spa control equipment
- Polymer headers for improved longevity
- Child lock function
- Service code diagnostics
- Remote control option
- Suitable for outdoor installations only
- Natural and LP gas models

POOL HEATER MODELS 200 TO 430

- Robust powder coated all metal construction
- Cupro-nickel heat exchanger for greater protection against corrosion
- Polymer Headers for improved longevity
- Allows operation of two motorised actuator valves (pool / spa changover)
- Pump run on timer for cooldown
- Energy saving “hot surface ignition”
- Easy integration with other pool & spa control equipment
- Remote control option
- Suitable for indoor or outdoor installations
- Service code diagnostics
- Child lock function
- Natural and LP gas models
- Manufactured in Australia

MODELS – RAYPAK PREMIUM SMALL COMMERCIAL GAS POOL HEATER RANGE

The Raypak range of small commercial pool and spa gas heaters feature bronze headers for better resistance against corrosion and are capable of heating the biggest or smallest of pools and spas, extending swimming time and enjoyment.

Raypak Premium Range Pool Heater Features

- Robust powder coated all metal construction
- Bronze Headers for greater heat tolerance and protection against corrosion
- Cupro nickel heat exchanger
- Allows operation of two motorised actuator valves (pool / spa changover)
- Pump run on timer for cooldown
- Energy saving “hot surface ignition”
- Easy integration with other pool & spa control equipment
- Remote control option
- Suitable for indoor or outdoor installations
- Service code diagnostics
- Child lock function
- Natural and LP gas models
- Manufactured in Australia

Heater Accessories

A range of accessories is available to assist with Raypak gas heater installation. Accessories should be ordered with the gas heater for included supplier freight charges.

Raypak Range

RESIDENTIAL RANGE

Part Number	Product Description	Nominal Size
2701311	Raypak Spartan Gas Heater 120MJ NG	120MJ NG
2701312	Raypak Spartan Gas Heater 117MJ LPG	17MJ LPG
2702001	Raypak Gas Heater 196MJ NG	196MJ NG
2702002	Raypak Gas Heater 185MJ LPG	185MJ LPG
2702801	Raypak Gas Heater 278MJ NG	278MJ NG
2702802	Raypak Gas Heater 261MJ LPG	261MJ LPG
2703501	Raypak Gas Heater 343MJ NG	343MJ NG
2703502	Raypak Gas Heater 323 MJ LPG	323 MJ LPG
2704301	Raypak Gas Heater 420 MJ NG	420 MJ NG
2704302	Raypak Gas Heater 369 MJ LPG	369 MJ LPG

PREMIUM RANGE WITH BRONZE HEADERS

Part Number	Product Description
2701271	Raypak Comm Gas Heater 110 MJ NG
2701272	Raypak Comm Gas Heater 103 MJ LPG
2702803	Raypak Comm Gas Heater 278 MJ NG
2702804	Raypak Comm Gas Heater 261 MJ LPG
2704303	Raypak Comm Gas Heater 420 MJ NG
2704304	Raypak Comm Gas Heater 369 MJ LPG

HEATER ACCESSORIES (to be ordered with heater for included freight)

Part Number	Product Description
27056009220	Remote In-house Thermostat
27056009221	Remote Thermostat Cable 10m
27056009222	Remote Thermostat Cable 20m
27056009223	Remote Thermostat Cable 50m
27056009224	Flow Switch Kit - 40 / 50mm diam.
27096501222	Pressure Relief Valve (PRV) - 45psi 0.6 MBTU
27096800040	Header Coupling Kit 40mm (2 off per kit)
27096800050	Header Coupling Kit 50mm (2 off per kit)
27096959305	Power Vent R6MVAHT (0.18kW)
27096959312	Power Vent Adaptor Kit 200
27096959313	Power Vent Adaptor Kit 280
27096959314	Power Vent Adaptor Kit 350
27096959315	Power Vent Adaptor Kit 430
27096009203	High Wind Top (HWT) Kit - Model 200
27096009204	High Wind Top (HWT) Kit - Model 280
27096009205	High Wind Top (HWT) Kit - Model 350
27096009206	High Wind Top (HWT) Kit - Model 430
27056009004	Indoor Hood Kit - Model 127
27056001682	Indoor Hood Kit - Model 167
27096009178	Indoor Hood Kit - Model 200
27096009179	Indoor Hood Kit - Model 280
27096009180	Indoor Hood Kit - Model 350
27096009181	Indoor Hood Kit - Model 430
27056108109	Indoor Hood Kit (Adaptor Plate Only) Model 200
27056108209	Indoor Hood Kit (Adaptor Plate Only) Model 280
27056108309	Indoor Hood Kit (Adaptor Plate Only) Model 350
27056108409	Indoor Hood Kit (Adaptor Plate Only) Model 430
27096959310	Twin Relay Box

Multiplex pool system data sheet

We have standards.

All our multiplex pool systems have high standards. We comply with WQA, which meets requirements of NSF/ANSI 50. We also comply with DS 477 the Danish Standard for pool systems as well as the Danish act for pool systems. This ensures you get clean and safe water.
All our systems are built using DIN standard components, ensuring easy standardised service options.

DIN Deutsches Institut für Normung

DS DANSK STANDARD

TESTED AND CERTIFIED WaterQuality UNDER INDUSTRY STANDARDS ®

C US

Save water. Save space. Fully automated.

Liqtech offers a new innovative filtration system based on high quality silicon carbide ceramic filters providing high efficiency and reduced life cycle costs.
Our philosophy is to constantly develop new and more efficient filtration systems that provide environmentally friendly solutions, better water quality and be economically attractive.
Smaller modular based systems occupy much less space than traditional filters and provide a simple and effective means for retrofitting existing or designing new installations.
We have developed a unique cleaning process that uses significantly less water than other high rate sand or DE filtration systems, as we deploy an airflush sequence for each filter.
Our filters provide full automation with backwashing only done on the basis of the trans membrane pressure (TMP); thereby reducing water usage, daily supervision and maintenance. The advanced control system allows you to control any other components and attractions in the pool system, saving you time and money.

Size matters.

A ceramic silicon carbide filter is 22% smaller than a regenerative filter, and a full 72% smaller than a sand filter, based on equal pool volume and GPM/M3.

Tiny pore size. Colossal difference.

A standard pore size of 3 microns greatly increases water clarity. Organic and inorganic particles are removed within every 6 hours. This compares with a 1-2 week period depending on pool circulation time, thus eliminating the growth of bacteria and reducing chemical usage.

3 micron - ceramic silicon carbide

5 micron - regenerative

20 micron - average sand filter

Using our ceramic filters decreases the need for chemicals such as chlorine and acid which in turn provides a better bathing experience and a better working environment. All in all, a much more environmentally friendly solution.

How it works.

The pore size of the membrane walls allows for water to pass through but dirt, bacteria and other substances are held back. Dirty water in, clean water out. It's as simple as that.

Way ahead.

	Ceramic	Regenerative	Sand	Catridge	VAC DE	Vac sand
Automated system	+		+			
Uses less water for backwash	+	+		+		
Uses less chemicals	+			+	+	
Minimizes crypto	+	+				
Take up less space	+			+		
15+ year warranty	+	+				
Uses no media	+					
Removes organic and inorganic material daily	+				+	
Fully non-corrosive construction	+			+		
Filters down to 3 micron	+	+		+		
24/7 monitoring	+		+			
Control filter from anywhere in the world	+					
Fits through a 3x6 ft. doorway	+			+		
Minimal installation labor	+					
Pre-installed electrical and control	+					
Monitors temperature	+					
Monitors flow	+					
Monitors pressure and pressure drop	+					
Option for pH, chlorine and more	+					

No hidden costs.
Plain and simple.

	Ceramic	Regenerative	Sand	Catridge	VAC DE	Vac sand
Additional valves needed		yes	yes		yes	yes
Additional controllers needed		yes	yes	yes	yes	yes
Flow meter needed		yes	yes	yes	yes	yes
Filter pump needed		yes	yes	yes	yes	yes
Strainer needed	yes	yes	yes	yes		
Manual valves needed		yes	yes	yes	yes	yes
Backwash pump needed		yes			yes	
Install labor (USD)	1.000	20.000	15.000	10.000	30.000	25.000
Electrical hookup (USD)	3.000	20.000	20.000	15.000	20.000	20.000
Average cost of media per year (USD)	0	3.000	1.000	3.000	4.000	3.000

System overview

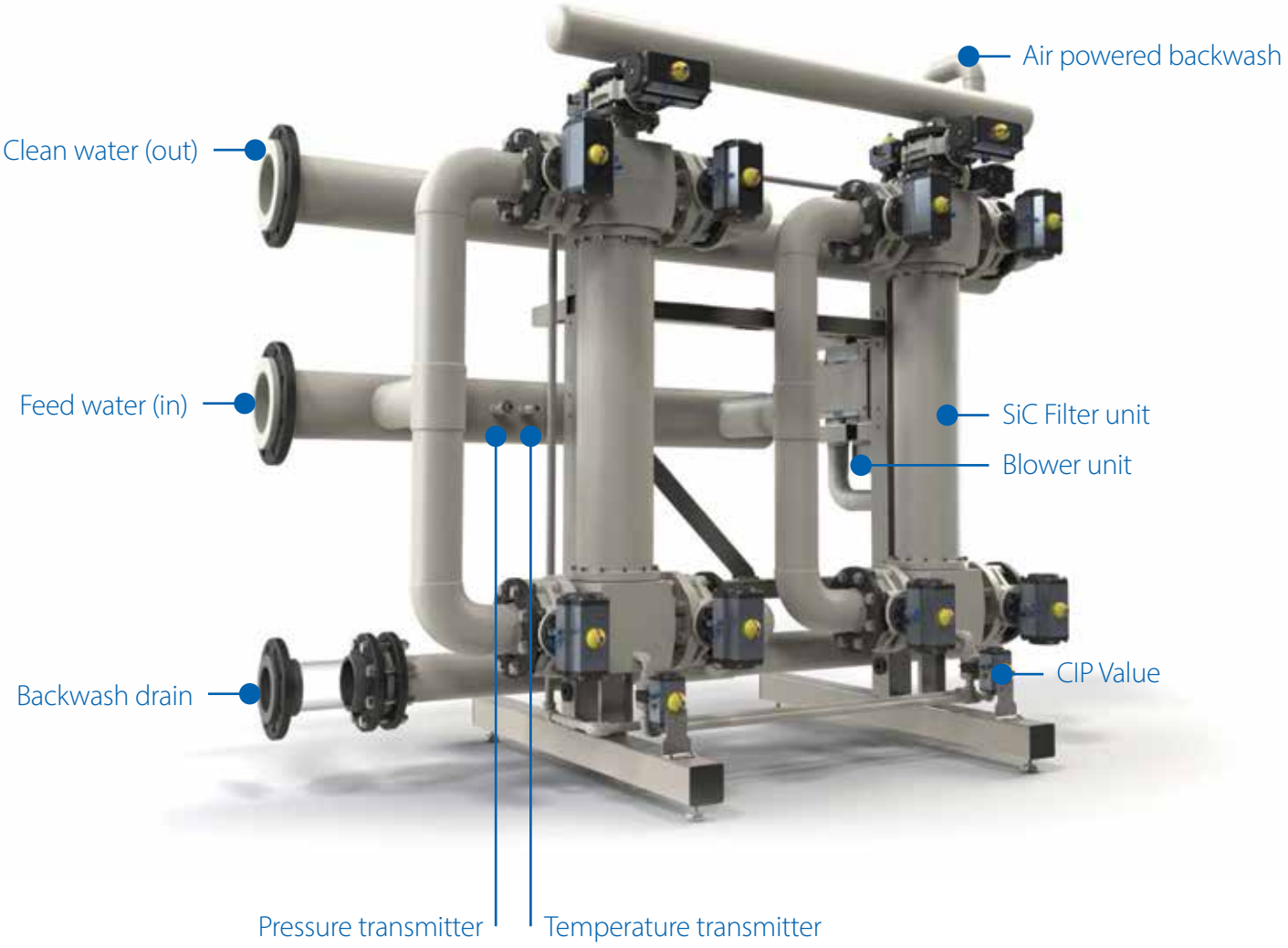

Unleash the beast.

Primary benefits
Fully automated Allan Bradley/Rockwell PLC
Data logging for analysis and optimization
Controls all feed and recirculation pumps, valves and sensors
Continuous monitoring of entire systems
Alarms via SMS and e-mail
Simple HMI
Full integration of aux equipment and attractions
Onsite and remote control of the system

Additional benefits
Reduces filter room size
Faster return of investment due to lower water and chemical consumption
Lifetime warranty on our ceramic silicon carbide filters
2 year system warranty

Multiplex.
Single row.

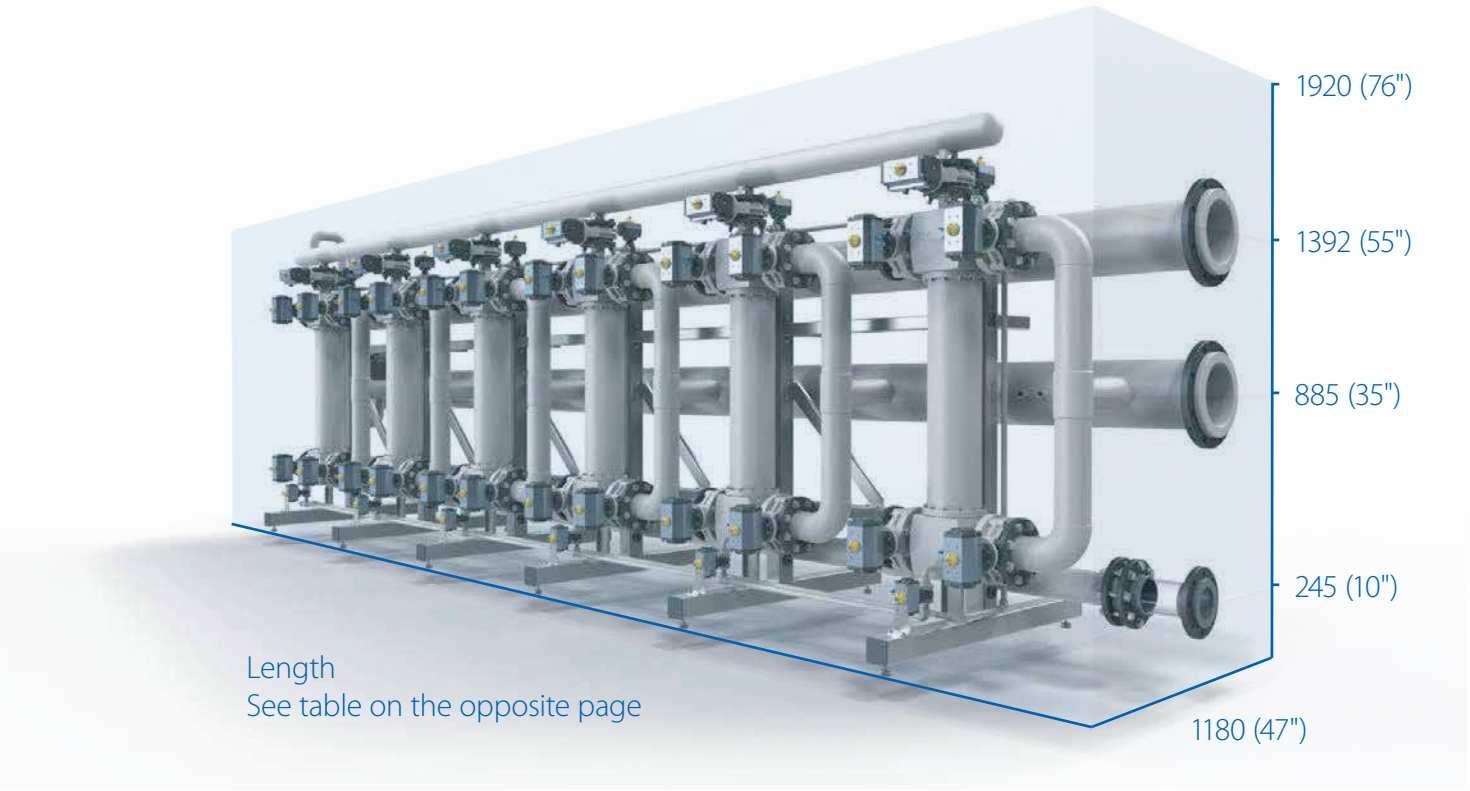

Length
See table on the opposite page

Sizes.

	Height	Width	Length	Connection
2	1920 (76")	1180 (47")	2250 (88")	160 (6")
3			3200 (126")	160 (6")
4			4150 (164")	180 (6")
5			5100 (201")	200 (8")
6			6050 (239")	225 (8")

Multiplex.
Dual row.

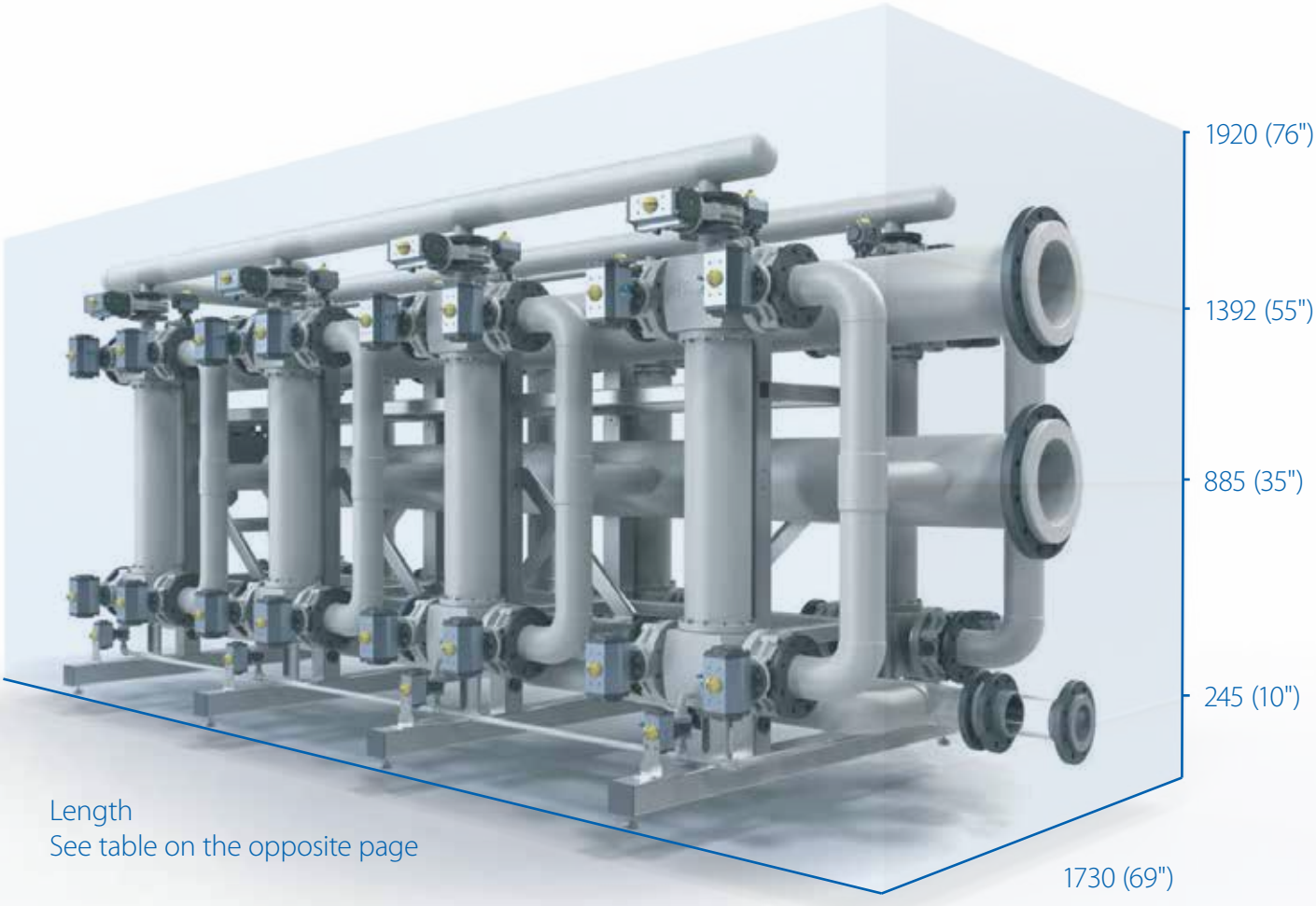

Length
See table on the opposite page

Sizes.

	Height	Width	Length	Connection
3	1920m (76")	1730mm (69")	2250mm (88")	160mm (6")
4			2250mm (88")	180mm (6")
5			3200mm (126")	200mm (8")
6			3200mm (126")	225mm (8")
7			4150mm (164")	250mm (10")
8			4150mm (164")	250 (10")

WATER & WELLNESS
RANDERS

Randers Water and Wellness

In correlation with the erection of a new leisure center in Randers, Denmark, it was requested to have a water treatment system capable of accommodating any future high demands. The system was required to be able to treat the water from five pools with a total capacity of 1650 m^3/h (7250 GPM).

One of the main objectives in Randers was to find a solution comprising a very compact system, yet still with an eye to water-, chemicals- and energy savings.

The solution was a hightech water treatment system from Liqtech Systems, featuring microfiltration membranes. It was chosen based on its ability to provide the best available and most dense water filtration technique, hence quality, for pool systems. The Liqtech system also saved vast amounts of water used for backwashing the system, while running flawlessly and reliably.

Today the microfiltration systems runs smoothly in Randers providing superior water quality, delivering remarkable savings on backwash, electricity, chemicals and maintenance.

"We wanted to build the most modern and energy efficient swimming pool in Denmark. The project was originally specified with regular sand filters, but when we came across the ceramic filters from Liqtech Solutions we were immediately convinced that this was the right solution for us. The compact design of the filters allowed us to downsize the basement area and save a lot of construction costs, but the decisive factor was the low consumption of water and energy. The facility is a PPP (Public Private Partnering) and we are going to run the facility for 30 years. Because of this it was important for us to choose the system with the lowest life cycle cost."

Gribskov Gruppen A/S
Anders Skak, CEO

Liqtech

In essence LiqTech was created out of the need for new technologies to meet ever increasing demands for cleaner air and cleaner water. The company was born from a vision that technology companies with the right products and management could deliver sustainable profits and growth.

LiqTech is a US listed (NYSE:LIQT) technology company head quartered in Denmark, who for more than 10 years has been at the leading edge in developing and marketing its own proprietary products to the cleantech industry.

At its core is the ability to manipulate Silicon Carbide (SiC) – one of the most durable of manmade materials which has allowed it to make a high value, high performance product for liquid and gaseous applications.

WATERCO

water, the liquid of life

Australian and New Zealand distributor;

Waterco Limited
36 South Street
Rydalmere NSW 2116
Ph: +61 2 9898 8600
Fx: +61 2 9898 1877
www.waterco.com.au

LiqTech

WATERCO

water, the liquid of life

Australia

NSW - Sydney
(HEAD OFFICE)
Tel : +61 2 9898 8600

VIC / TAS - Melbourne
Tel : +61 3 9764 1211

WA - Perth
Tel : +61 8 9273 1900

QLD - Brisbane
Tel : +61 7 3299 9900

SA / NT - Adelaide
Tel : +61 8 8244 6000

ACT Distributor
Tel : +61 2 6280 6476

International

Waterco USA
Augusta, Georgia, USA
Tel : +1 706 793 7291

Waterco Canada
Boucherville, Quebec, Canada
Tel : +1 450 748 1421

Waterco (Europe) Limited
Sittingbourne, Kent, UK
Tel : +44(0) 1795 521 733

Waterco (NZ) Limited
Auckland, New Zealand
Tel : +64 9 525 7570

Waterco (C) Limited
Guangzhou, China
Tel : +86 20 3222 2180

Waterco (Far East) Sdn. Bhd.
Selangor, Malaysia
Tel : +60 3 6145 6000

PT Waterco Indonesia
Jakarta, Indonesia
Tel : +62 21 4585 1481

Waterco International Pte Ltd
Nehsons Building, Singapore
Tel : +65 6344 2378

Established since 1981, Waterco is an Australian public listed company involved in the manufacture and distribution of:

- Swimming pool/spa equipment and chemicals
- Domestic water filters, softeners and purifiers
- Commercial water treatment equipment

Waterco's research & development team have created an innovative range of award winning products.

The company's advanced fibreglass winding and pioneering plastic moulding techniques have delivered premium quality products to over 40 countries via its branches and international distributors.

www.waterco.com

Waterco Commercial and Water Treatment Catalogue_10/2020