WATERCO
water, the liquid of life

MULTICYCLONE 70XL

CENTRIFUGAL WATER FILTRATION

A revolution in pool filtration, MultiCyclone 70XL is a brilliant per-filtration device that works on the basis of centrifugal water filtration and is designed with no moving parts and no filter media to clean or replace.

- **Minimises filter maintenance and saves water**
- **No filter media to clean or replace**
- **Maximum flow rate of 90m³ / hr**
- **Compact size and ease of installation**
- **Suitable for new and existing commercial installations**

SAVE WATER

SAVE CHEMICALS

SAVE TIME

2 YEAR WARRANTY

www.waterco.com

Multi-award winning

Waterco has developed a revolutionary centrifugal filtration system that is both economical and eco-friendly.

Since launching in 2008, Waterco's MultiCyclone technology has continued to impress the world with its innovative design, which has earned it 11 local and international awards, including 2007 Piscina Barcelona Sustainability Award, Splash Environmental product of the year 2010, Best Product Award at SPATEX UK in 2011 and 2012, and the Design Master Green Award at India's WAVES International Pool, Spa and Bath Expo.

SPLASH! Environmental Awards 2010 Winner Environmental Product of the Year

2007 Piscina Barcelona Sustainability Award

SPASA Most innovative product award 2008

The MultiCyclone 70XL is an evolution of Waterco's MultiCyclone technology. Waterco has specially created a commercial version by increasing its number of hydrocyclones to cater for the higher flow rates and redesigned to cope with the demanding requirements of commercial installations.

The MultiCyclone 70XL has been specially created to handle larger water capacities for commercial and industrial applications.

Ease filter workload

An Australian innovation, MultiCyclone 70XL pre-filters up to 80% of the filter's incoming dirt load prior to the main filter, reducing the load on the filter and therefore reducing the frequency of filter maintenance by up to 80% and saving backwash water.

As the MultiCyclone 70XL intercepts more and more sediment, the flow rate remains unchanged, improving pool water circulation.

Centrifugal water filtration

MultiCyclone 70XL works on the basis of centrifugal water filtration and is designed with no moving parts and no filter media to clean or replace.

- UV and corrosion proof
- Glass filled thermoplastic housing
- 70 hydrocyclones configured for optimal filtration
- Sediment chamber
- Sediment inspection port
- Purge valve for ease of maintenance
- Hydraulically efficient internals
- 100mm / 4" quick connect unions
- Large filter base for stable floor mounting

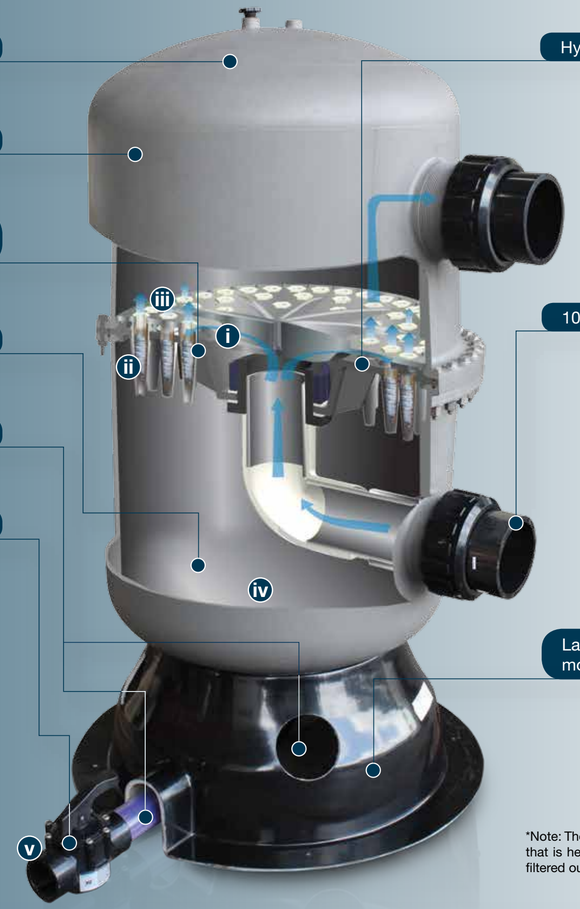

i. Incoming water enters 70 hydro cyclones tangentially, generating a strong centrifugal effect.

ii. The sediment is spun out to the hydro cyclone's wall, and then spirals down to the sediment chamber*.

iii. The filtered water migrates towards the centre of the hydro cyclone where the flow reverses and spirals upwards through the outlet.

iv. Accumulation of sediment can be visibly monitored through the MultiCyclone's inspection ports

v. The MultiCyclone is easily cleaned by opening its purge valve. Only 300 litres of water is discharged to cleanse the MultiCyclone.

*Note: The MultiCyclone is designed to filter sediment that is heavier than water, floating debris cannot be filtered out by centrifugal filtration.

WATERCO
water, the liquid of life

www.waterco.com

MultiCyclone 70XL solution for Seaview Haven Holiday Park

The Seaview Haven Holiday Camp at Weymouth Bay, on England's south coast, is defined by its water facilities, which includes heated indoor and outdoor swimming pools. And when the camp's operators undertook a major refurbishment of the indoor pool in February 2013, the contractor discovered a 'small problem'.

An existing indoor pool was being refurbished and upgraded, but the plant room could not be altered which meant there was insufficient room to add another filter in order to meet the latest PWTAG standards.

The MultiCyclone 70XL is designed specifically for use in commercial pools and given the 90m³ Seaview Haven pool caters for a large volume of people, the MultiCyclone 70XL was the perfect solution to address the client's space and budget restrictions.

The MultiCyclone 70XL, gives the staff at Seaview Holiday Park a break from the intense maintenance schedule, as the system requires less backwashing than the previous filter.

The MultiCyclone 70XL gave an opportunity to upgrade filtration whilst taking up less plant room space than another filter, and at less cost.

MultiCyclone 70XL Head Loss Curve

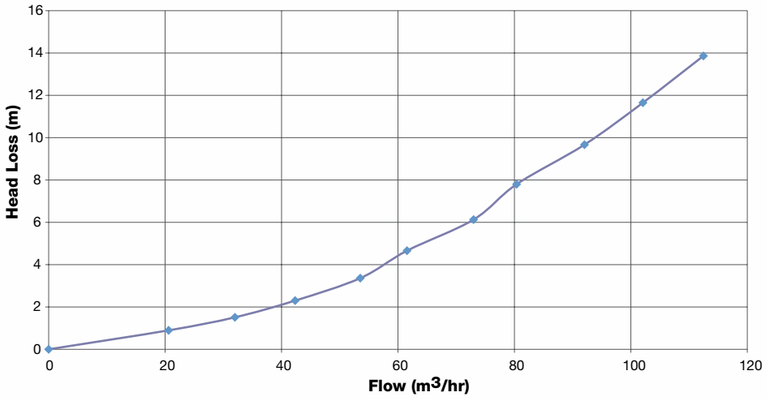

Dimension

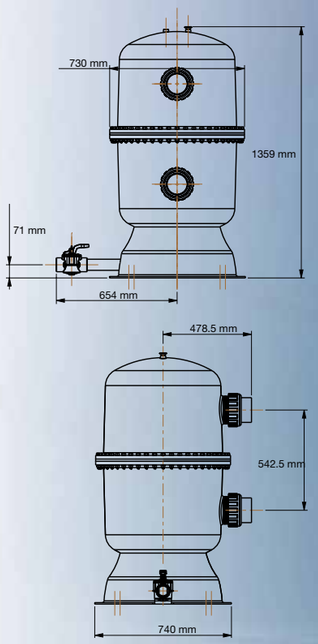

Technical Specification

Model	Connection Ports	Minimum Flow Rate	Maximum Flow Rate	Pressure Rating
MultiCyclone 70XL	100mm/4" Nominal	36m³/hr (158 GPM)	90m³/hr (396 GPM)	2.5 Bar (250 kPa)

Warranty

MultiCyclone XL is covered by a 2 year warranty and a 12 month warranty on labour.

WATERCO
water, the liquid of life

Waterco Micron fibreglass filters

MultiCyclone XL filters are part of Waterco's comprehensive range of Micron fibreglass filters. Manufactured from the highest grade of non corrosive materials and employing the latest in fibreglass winding technology.

Established since 1981, Waterco is an Australian public listed company involved in the manufacture and distribution of:

Swimming pool/spa equipment and chemicals
Domestic water filters, softeners and purifiers
Commercial and Industrial water treatment equipment.

Waterco's research & development team has created an innovative range of award winning products.

The company's advanced fibreglass winding and pioneering plastic moulding techniques have delivered premium quality products to over 40 countries via its branches operating in Australia, New Zealand, Malaysia, China, the United Kingdom, United States of America, Canada, Indonesia, Singapore and France.

OFFICES - AUSTRALIA
NSW - Sydney (Head Office)
Tel: +61 2 9898 8600

QLD - Brisbane
Tel: +61 7 3299 9900

VIC/TAS - Melbourne
Tel: +61 3 9764 1211

WA - Perth
Tel: +61 8 9273 1900

SA/NT - Adelaide
Tel: +61 8 8244 6000

ACT Distribution
Tel: +61 2 6280 6476

OFFICES - OVERSEAS
Waterco (Europe) Limited
Sittingbourne, Kent. UK
Tel: +44 (0) 1795 521 733

Waterco (USA) Inc
Augusta, Georgia, USA
Tel: +1 706 793 7291

Waterco Canada
Longueuil, Quebec, Canada
Tel: +1 450 748 1421

Waterco (NZ) Limited
Auckland, New Zealand
Tel: +64 9 525 7570

Waterco (C) Limited
Guangzhou, China
Tel: +86 20 3222 2180

Waterco (Far East) Sdn Bhd
Selangor, Malaysia
Tel: +60 3 6145 6000

PT Waterco Indonesia
Jakarta, Indonesia
Tel: +62 21 4585 1481

Waterco Singapore Intl Pte Ltd
Nehsons Building, Singapore
Tel: +65 6344 2378

Waterco France
SAINT PRIEST, France.
Tel: +33 4 72 79 33 30

DISTRIBUTED BY:

ZZB1565 05/13

WATERCO
water, the liquid of life

APSP The Association of Pool & Spa Professionals
Member WATER QUALITY ASSOCIATION
SPASA AUSTRALIAN MEMBER

In the interest of providing better quality and value we are constantly improving and updating our products. Consequently, pictures and information on our brochures may sometimes vary slightly from models available.